Reviewed for Code Compliance
With The Florida Building Code
ECS, Florida LLC
41-5640-BLD2 7/20/2026

Electrical Review - Roger Sanders PX651 - Reviewed - 7/14/2026
Mechanical Review - Roger Sanders PX651 - Reviewed - 7/14/2026
Plumbing Review - Roger Sanders PX651 - Reviewed - 7/14/2026
Fire Review - Jay Traina - NA to Private Provider - 7/16/2026
Building Review - Roger Sanders PX651 - Reviewed - 7/14/2026

OLD MEMORIAL

SITE ADDRESS 13600 Hixon Rd, Tampa, FL 33626

SITE LOCATION MAP

NORTH

SITE

OWNER HILLSBOROUGH GOLF DEV INC

CONTRACTOR TBD

ARCHITECT LAFATE WILSON
1030 ARLINGTON AVE N, ST PETERSBURG FL 33705

MEP ENGINEER Joseph Lawrence & Co
317 Riveredge Blvd, Suite 110
Cocoa, Florida 32922

SCOPE NARRATIVE BUILDING 2 IS BEING DEMOLISHED AND REPLACED. THIS BUILDING INCLUDES STORAGE, FUELING AND CART WASH. NEW ELECTRICAL AND PLUMBING WILL BE PROVIDED TO ACCOMMODATE THE NEW BUILDING LAYOUT. THERE IS NO HVAC SCOPE IN THIS BUILDING.

SITE DATA

PARCEL ID	U-03-28-17-ZZZ-000000-26610.0
LEGAL DESCRIPTION	SW 1/4 OF NE 1/4 AND S 1/2 OF NW 1/4, NW 1/4 OF NW 1/4, W 1/2 OF SW 1/4 & NE 1/4 OF SW 1/4 & W 1/2 OF NW 1/4 OF SE 1/4
LOT SIZE	315 ACRES
FLOOD ZONE	X
PERMITTING JURISDICTION	HILLSBOROUGH COUNTY
ZONING DISTRICT	AS-1 AGRICULTURAL, SINGLE-FAMILY
BUILDING CODE EDITIONS	8TH EDITION 2023 FBC - BUILDING 8TH EDITION 2023 FBC - ENERGY 8TH EDITION 2023 FBC - TEST PROTOCOL 8TH EDITION 2023 FBC - PLUMBING 8TH EDITION 2023 FBC - MECHANICAL 8TH EDITION 2023 FBC - FUEL GAS 8TH EDITION 2023 FBC - ACCESSIBILITY 8TH EDITION 2023 FLORIDA FIRE PREVENTION CODE NEC 2020 NATIONAL ELECTRICAL CODE - NFPA 70

BUILDING 2

GROUND FLOOR (UNDER ROOF)	3,555 SF
TOTAL BUILDING AREA	**3,555 SF**

1 STORIES PROVIDED
BUILDING HEIGHT = 20'-10" TO TOP OF ROOF

BUILDING CODE DATA

OCCUPANCY	S-1 (BUSINESS ACCESSORY USE)
CONSTRUCTION TYPE	2B UNSPRINKLERED
ALLOWABLE BUILDING HEIGHT	55'
ALLOWABLE STORIES	2 STORIES
ALLOWABLE BUILDING AREA	17,500 SF

FIRE RESISTANCE RATING	WALLS & PARTITIONS
PRIMARY STRUCTURAL FRAME	0 HR
EXTERIOR BEARING WALLS	0 HR
INTERIOR BEARING WALLS	0 HR
INTERIOR NON-BEARING WALLS	0 HR
FLOOR / CEILING CONSTRUCTION	0 HR
ROOF CONSTUCTION	0 HR

SPRINKLER SYSTEM	NOT REQUIRED
FIRE EXTINGUISHERS	TYPE 2-A 10-B.C, 75' MAX TRAVEL DISTANCE TO EXTINGUISHER
INTERIOR WALL & CEILING FINISHES CLASSIFICATION	ROOMS AND ENCLOSED SPACES - CLASS C CORRIDORS AND ENCLOSURE FOR EXIT - CLASS B
EXIT ACCESS TRAVEL DISTANCE	200 FEET
MAX COMMON PATH OF TAVEL	100 FEET FOR OCC LOAD LESS THAN OR EQUAL TO 30 PEOPLE 75 FFET FOR OCC LOAD GREATER THAN 30 PEOPLE
FIRE ALARM SYSTEM	NOT REQUIRED

FLORIDA PRODUCT APPROVAL

SECTIONAL DOOR		
OVERHEAD DOOR CORPORATION	EXTERIOR DOOR	FL11734-R10
SINGLE AND DOUBLE SWING DOOR		
NEXT DOOR COMPANY	EXTERIOR DOOR	FL12648-R7

GENERAL NOTES

1. EXISTING ITEMS AND CONDITIONS ARE DEPICTED AND DESCRIBED ON THESE DRAWINGS ACCORDING TO THE BEST AVAILABLE INFORMATION AND SURVEYS. THE ARCHITECT PROVIDES NO ASSURANCE AS TO, AND ASSUMES NO RESPONSIBILITY FOR THE ACCURACY OF THESE DEPICTIONS AND DESCRIPTIONS. FIELD VERIFY AND DETERMINE, BY ANY MEANS NECESSARY, THE ACTUAL LOCATION, CONFIGURATION AND CONDITION OF ALL PERTINENT ITEMS, INCLUDING THOSE THAT MAY BE IN CONCEALED LOCATIONS. IF INVESTIGATION DISCOVERS THAT ACTUAL CONDITIONS DIFFER FROM WHAT IS DEPICTED OR DESCRIBED ON THESE DRAWINGS OR IF THE ITEMS AND CONDITIONS THAT ARE TO REMAIN AS PART OF THE FINISHED WORK ARE UNSUITABLE TO SUPPORT OR ACCOMMODATE THE WORK REQUIRED FOR THIS PROJECT, OR DO NOT COMPLY WITH BUILDING CODE REQUIREMENTS OR MEET CONSTRUCTION INDUSTRY STANDARDS, IMMEDIATELY NOTIFY THE ARCHITECT BY RFI AND DO NOT PROCEED WITH THE WORK UNTIL RECEIPT OF SUPPLEMENTAL INSTRUCTIONS FROM THE ARCHITECT.

2. DO NOT SCALE DRAWINGS. THE DIMENSIONS ON THE DRAWINGS GOVERN. WRITTEN NOTES REFERENCING AN ITEM WITH THE WORD ' TYPICAL' (TYP) APPLY TO ALL IDENTICAL ITEMS OR FEATURES INDICATED ELSEWHERE ON THE DRAWINGS.

3. ESTABLISH AREAS AND LIMITS OF CONSTRUCTION ACTIVITY ACCEPTABLE TO THE OWNER AND PROVIDE THE TEMPORARY FACILITIES REQUIRED TO ACCOMPLISH THE WORK INCLUDING; FIELD OFFICE, TOILETS, ELECTRIC SERVICE, SITE ACCESS, PARKING, STORAGE AND CONSTRUCTION STAGING AREAS. PROVIDE TEMPORARY WALKWAYS, DRIVEWAYS, BARRIERS, SIGNS AND ILLUMINATION TO SEPARATE AND PROTECT THE GENERAL PUBLIC FROM THE WORK RELATED ACTIVITIES. PROVIDE ACCESS ROUTES TO AND FROM AREAS OF CONSTRUCTION ACTIVITY FOR CONSTRUCTION PERSONNEL THAT COMPLY WITH ALL OSHA AND OTHER GOVERNMENT SAFETY AND ACCESSIBILITY REQUIREMENTS. ASSUME FULL LIABILITY FOR ANY DAMAGE TO ADJACENT PROPERTIES, DAMAGE TO PERSONAL PROPERTY, INJURY TO PERSONS, ETC. CAUSED BY WORK RELATED ACTIVITIES OR NEGLIGENCE.

4. PROVIDE TEMPORARY SHORING AS REQUIRED TO ADEQUATELY SUPPORT AND RETAIN EXISTING MATERIALS AND CONSTRUCTION AFFECTED BY THE WORK. PROTECT THOSE ITEMS, MATERIALS & FINISHES TO REMAIN. REMOVE ONLY THOSE ITEMS AND MATERIALS NECESSARY TO ACCOMMODATE THE WORK WITH CLEAN, UNIFORM CUTS. FILL AND PATCH REMAINING CONSTRUCTION AS REQUIRED WITH MATERIALS MATCHING THE ADJACENT MATERIALS IN KIND, STRENGTH, AND APPEARANCE SO AS TO FINISH UNIFORMLY WITHOUT TELEGRAPHING DIFFERENCES BETWEEN THE PATCHES AND THE ADJACENT CONSTRUCTION. REPAIR OR REPLACE ANY ITEMS, MATERIALS OR FINISHES DAMAGED BY THE WORK AT NO COST TO THE OWNER.

5. PROVIDE THE ITEMS, PRODUCTS AND FEATURES AS DEPICTED, DESCRIBED AND SPECIFIED ON THE DRAWINGS. IF DISCREPANCIES ARE DISCOVERED ON THE DRAWINGS, NOTIFY THE ARCHITECT BY RFI AND DO NOT PROCEED WITH WORK RELATED TO ITEMS IN QUESTION UNTIL RECEIPT OF SUPPLEMENTAL INSTRUCTIONS FROM THE ARCHITECT. REQUESTS FOR SUBSTITUTIONS MAY BE SUBMITTED TO THE ARCHITECT FOR CONSIDERATION. DO NOT MAKE SUBSTITUTIONS WITHOUT THE APPROVAL OF THE ARCHITECT. WHERE A "BASIS-OF-DESIGN" PRODUCT IS SPECIFIED, A COMPARABLE PRODUCT MAY BE PROVIDED, SUBJECT TO COMPLIANCE WITH THE REQUIREMENTS OF THE CONTRACT DOCUMENTS.

6. SUBMIT SHOP DRAWINGS, PRODUCT DATA AND SAMPLES TO THE ARCHITECT FOR REVIEW AS REQUIRED BY THE CONTRACT DOCUMENTS. DO NOT PROCEED WITH WORK RELATED TO SUBMITTALS MARKED "REJECTED" OR "REVISE AND RESUBMIT" BY THE ARCHITECT OR THE ARCHITECT'S CONSULTANTS. SUBMITTALS MARKED "APPROVED", "NO EXCEPTION TAKEN" OR "MAKE CORRECTIONS NOTED" DO NOT SUPERSEDE THE NEED TO COMPLY WITH THE REQUIREMENTS OF THE CONTRACT DOCUMENTS. SHOP DRAWINGS/SUBMITTALS ARE REQUIRED FOR BUT NOT LIMITED TO THE FOLLOWING: MILLWORK, STRUCTURAL/MISCELLANEOUS STEEL, HARDWARE, WOOD AND METAL DOORS, AND EQUIPMENT. SHOP DRAWINGS SHOULD INCLUDE DETAILED FABRICATION AND ERECTION DRAWINGS, SETTING DRAWINGS, AND MATERIAL SCHEDULES. FABRICATION SHALL BEGIN ONLY AFTER ARCHITECT'S REVIEW AND APPROVAL OF SHOP DRAWINGS.

7. PROVIDE A FLORIDA PRODUCT APPROVAL ISSUED BY THE FLORIDA DEPARTMENT OF BUSINESS & PROFESSIONAL REGULATION OR A MIAMI-DADE NOTICE OF ACCEPTANCE (NOA) ISSUED BY THE MIAMI-DADE COUNTY GOVERNMENT FOR EACH EXTERIOR COMPONENT AND CLADDING ASSEMBLY CERTIFYING THAT APPROVED TESTING HAS SUFFICIENTLY DEMONSTRATED THAT THE ASSEMBLY AND IT'S COMPONENTS, AS DESIGNED AND MANUFACTURED, WILL WITHSTAND THE WIND LOADS AND WIND-BORNE MISSILE IMPACTS IN COMPLIANCE WITH ALL CODE AND JURISDICTIONAL REQUIREMENTS FOR THE PROJECT LOCATION WHEN INSTALLED ACCORDING TO THE MANUFACTURER'S INSTRUCTIONS INCLUDING INSTRUCTIONS THAT MAY BE PROVIDED WITH THE FLORIDA PRODUCT APPROVAL OR NOA DOCUMENTS. PROVIDE THESE DOCUMENTS AS PART OF THE SUBMITTAL FOR EACH OF THESE ITEMS AND ASSEMBLIES FOR BCA APPROVAL.

8. PROVIDE ALL ITEMS AND FEATURES DEPICTED AND DESCRIBED ON THESE DRAWINGS AND OTHER CONTRACT DOCUMENTS SO THEY ARE PROPERLY PLACED, ALIGNED, PLUMB, SECURED, FINISHED AND FUNCTIONING AS INTENDED. PROVIDE FINISHED WORK THAT MEETS OR EXCEEDS CURRENT INDUSTRY STANDARDS FOR QUALITY AND PERFORMANCE. ARRANGE AND CONDUCT INSPECTIONS OF THE FINISHED WORK WITH THE OWNER, THE ARCHITECT, AND THE AUTHORITY HAVING JURISDICTION. APPROVAL OF THE WORK BY THESE OR ANY OTHER PARTY OR AGENCY DOES NOT SUPERSEDE THE NEED TO COMPLY WITH THE REQUIREMENTS OF THE CONTRACT DOCUMENTS.

9. REMOVE CONSTRUCTION DEBRIS, INCLUDING DEMOLISHED MATERIALS, FROM THE SITE AS REQUIRED TO PREVENT ACCUMULATION. TRANSPORT THESE MATERIALS OFF THE SITE IN A MANNER THAT WILL PREVENT SPILLAGE AND LEGALLY DISPOSE OF THESE MATERIALS AT AN EPA APPROVED DISPOSAL OR RECYCLING FACILITY.

10. KEEP COMPLETE AND LEGIBLE SETS OF CONSTRUCTION DOCUMENTS, ADDENDA, SUPPLEMENTAL INSTRUCTIONS, SUPPLEMENTAL DRAWINGS, MEETING NOTES, ETC. TOGETHER AND READILY AVAILABLE IN AN APPROPRIATE LOCATION ON SITE.

11. CONCEAL CONDUIT, PIPING, ETC. WITHOUT EXCEPTION. PROVIDE ACCESSIBLE JUNCTION BOXES, VALVES, CLEANOUTS, ETC., AS REQUIRED BY CODE.

12. WHERE POSSIBLE AND BEST PRACTICE, ALIGN THE SEAMS AND EDGES OF BREAK METAL AND FLASHING WITH ADJACENT REVEALS, EDGES OF MATERIAL TRANSITIONS, OR WITH BUILDING DESIGN FEATURES. CONSULT WITH ARCHITECT AS REQUIRED.

13. PER OWNER - CONTRACTOR AGREEMENT, PROJECT TO FOLLOW ALL OSHA STANDARDS AND REQUIREMENTS. INCLUDE OCCUPATIONAL SAFETY AND HEALTH ADMINISTRATION (OSHA) EXCAVATION SAFETY STANDARD 29 C.P.R., SECTION 1926 630 SUBPART P. WHICH ARE INCORPORATED AS THE STATE STANDARD

TAG LEGENED

- 1 — REVISION MARKER
- REVISION CLOUD
- NORTH — NORTH ARROW
- 1 A101 SIM — VIEW CALLOUT
- 1 A101 SIM — SECTION MARK
- Ref 1 A101 1 Ref Ref Ref — EXTERIOR ELEVATION
- Ref A101 Ref Ref Ref — INTERIOR ELEVATION

ABBREVIATIONS

A/C	AIR CONDITIONING
AD	AREA DRAIN
ADA	AMERICANS WITH DISABILITIES ACT
ADD	ADDITIONAL
ADJ	ADJUSTABLE
AFF	ABOVE FINISH FLOOR
ALT	ALTERNATE
AL	ALUMINUM
ARCH	ARCHITECTURAL
A/V	AUDIO VISUAL
BLDG	BUILDING
CFMF	COLD FORM METAL FRAMING
CJ	CONTROL JOINT / CONSTRUCTION JOINT
CL	CENTER LINE
CLG	CEILING
CLR	CLEAR
CMU	CONCRETE MASONRY UNIT
CO	CLEANOUT
COL	COLUMN
CONC	CONCRETE
CTR	CENTER
DBL	DOUBLE
DEMO	DEMOLITION
DEPT	DEPARTMENT
DF	DRINKING FOUNTAIN
DIA	DIAMETER
DIFF	DIFFUSER
DIM	DIMENSION
DN	DOWN
DWG	DRAWING
EA	EACH
EJ	EXPANSION JOINT
ELEV	ELEVATION
ELEC	ELECTRICAL
EQ	EQUAL
EQUIP	EQUIPMENT
EWC	ELECTRICAL WATER COOLER
EXIST	EXISTING
EXP	EXPANSION
EXT	EXTERIOR
FA	FIRE ALARM
FACP	FIRE ALARM CONTROL PANEL
FD	FLOOR DRAIN
FDC	FIRE DEPARTMENT CONNECTION
FEC	FIRE EXTINGUISHER CABINET
FEX	FIRE EXTINGUISHER
FF	FINISH FLOOR
FF&E	FURNITURE, FINISHES & EQUIPMENT
FIN	FINISH
FIXT	FIXTURE
FT	FEET
FURN	FURNITURE/ FURNISHED
GC	GENERAL CONTRACT/OR
GWB	GYPSUM WALLBOARD
HB	HOSE BIBB
HDW	HARDWARE
HM	HOLLOW METAL
HSS	HOLLOW STRUCTURAL SECTION
HT	HEIGHT
HVAC	HEATING, VENTILATING, AIR CONDITIONING
HW	HOT WATER
IN	INCH
LAV	LAVATORY
MAX	MAXIMUM
MECH	MECHANICAL
MEP	MECHANICAL, ELECTRICAL, PLUMBING
MFR	MANUFACTURER
MISC	MISCELLANEOUS
MTD	MOUNTED
MTL	METAL
MULL	MULLION
N/A	NOT APPLICABLE
NC	NOISE CRITERIA
NIC	NOT IN CONTRACT
NOM	NOMINAL
NRC	NOISE REDUCTION COEFFICIENT
NTS	NOT TO SCALE
OC	ON CENTER
OH	OVER HEAD
PLAM	PLASTIC LAMINATE
PLBG	PLUMBING
PREFAB	PREFABRICATED
PT	PRESSURE TREATED
PTD	PAINTED
PTN	PARTITION
PTxx	PAINT
QC	QUALITY CONTROL
QTY	QUANTITY
R	RADIUS
RCP	REFLECTED CEILING PLAN
RD	ROOF DRAIN
REC	RECESSED
REF	REFERENCE
REQ	REQUIRE / REQUIRED
REV	REVISION / REVISED
RM	ROOM
SCHED	SCHEDULE
SD	STORM DRAIN
SECT	SECTION
SF	SQUARE FEET/FOOT
SHT	SHEET
SIM	SIMILAR
SPEC	SPECIFICATION
SPKR	SPEAKER
SPR	SPRINKLER
SS	STAINLESS STEEL
SSK	SERVICE SINK
STD	STANDARD
STL	STEEL
STOR	STORAGE
STRL	STRUCTURAL
SUSP	SUSPENDED
SYMM	SYMMETRICAL
TEL	TELEPHONE OR TELECOM
THK	THICKNESS
THRU	THROUGH
TV	TELEVISION
TYP	TYPICAL
UL	UNDERWRITERS LABORATORY
UNFIN	UNFINISHED
U.N.O.	UNLESS NOTED OTHERWISE
UR	URINAL
VCT	VINYL COMPOSITION TILE
VERT	VERTICAL
VEST	VESTIBULE
VIF	VERIFY IN FIELD
W	WIDE, WIDTH
W/	WITH
W/O	WITHOUT
WC	WATER CLOSET
WD	WOOD
XTR	EXISTING TO REMAIN

SHEET #	SHEET NAME
A2-000	COVER SHEET
A2-100	LIFESAFETY PLAN
A2-101	FLOOR PLAN
A2-102	CEILING PLAN
A2-103	ROOF PLAN
A2-104	ELEVATIONS
A-002	ARCHITECTURAL SITE PLAN

LAFATE WILSON
architects

1030 arlington ave n, st petersburg fl 33705
(727) 490-9483
studio@lafatewilson.com

THE ARCHITECT'S COMMON LAW COPYRIGHT AND OTHER PROPERTY RIGHTS ARE HEREBY RESERVED IN THE IDEAS, DESIGNS, PLANS, DRAWINGS, AND SPECIFICATIONS SHALL NOT BE REPRODUCED OR CONVEYED IN ANY MANNER NOR ASSIGNED TO ANY THIRD PARTY WITHOUT FIRST OBTAINING THE EXPRESS WRITTEN PERMISSION OF THE ARCHITECT.

OLD MEMORIAL

13600 National Golf Dr
Tampa, FL 33626

no.	description	date
	PERMIT SET	04.24.26

A2-000

COVER SHEET

sheet size 24" x 36"

Reviewed for Code Compliance
With The Florida Building Code
ECS, Florida LLC
41-5640-BLD2 7/20/2026

Electrical Review - Roger Sanders PX651 - Reviewed - 7/14/2026
~~Mechanical Review - Roger Sanders PX651 - Reviewed - 7/14/2026~~
Plumbing Review - Roger Sanders PX651 - Reviewed - 7/14/2026
Fire Review - Jay Traina - NA to Private Provider - 7/16/2026
Building Review - Roger Sanders PX651 - Reviewed - 7/14/2026

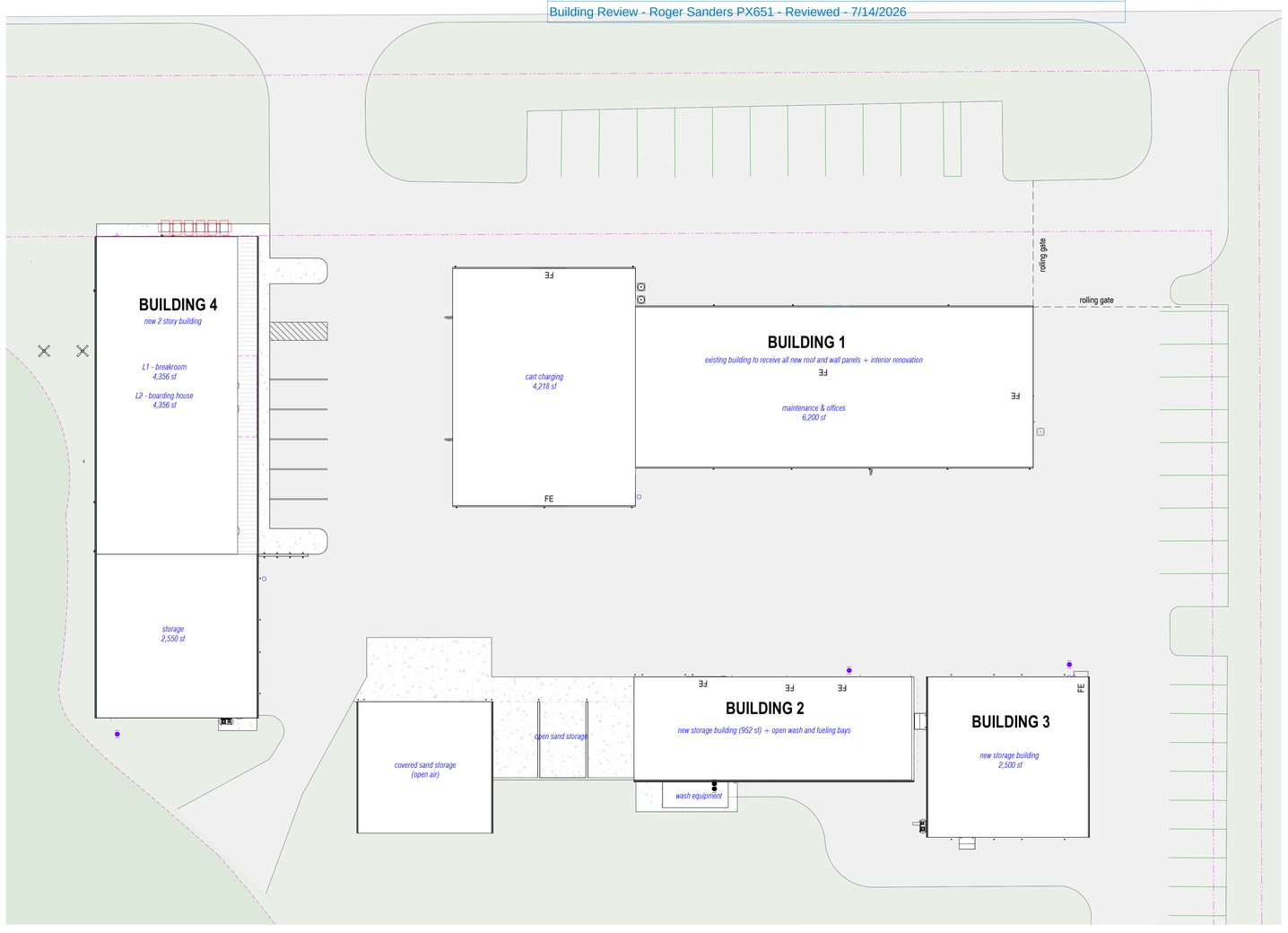

north 1 SITE PLAN
1" = 20'-0"

ARCHITECTURAL SITE PLAN FOR BUILDING LOCATION REFERENCE ONLY. REFER TO CIVIL PLANS FOR SITE LAYOUT AND DETAILS.

LAFATE WILSON
architects

1030 arlington ave n, st petersburg fl 33705
(727) 490-9483
studio@lafatewilson.com

THE ARCHITECT'S COMMON LAW COPYRIGHT AND OTHER PROPERTY RIGHTS ARE HEREBY RESERVED IN THE IDEAS, DESIGNS, PLANS, DRAWINGS, AND SPECIFICATIONS SHALL NOT BE REPRODUCED OR CONVEYED IN ANY MANNER NOR ASSIGNED TO ANY THIRD PARTY WITHOUT FIRST OBTAINING THE EXPRESS WRITTEN PERMISSION OF THE ARCHITECT.

OLD MEMORIAL

13600 National Golf Dr
Tampa, FL 33626

no.	description	date
	PERMIT SET	04.24.26

A-002

ARCHITECTURAL SITE PLAN

sheet size 24" x 36"

Reviewed for Code Compliance
With The Florida Building Code
ECS, Florida LLC
41-5640-BLD2 7/20/2026

Electrical Review - Roger Sanders PX651 - Reviewed - 7/14/2026
Mechanical Review - Roger Sanders PX651 - Reviewed - 7/14/2026
Plumbing Review - Roger Sanders PX651 - Reviewed - 7/14/2026
Fire Review - Jay Traina - NA to Private Provider - 7/16/2026
Building Review - Roger Sanders PX651 - Reviewed - 7/14/2026

Product iQ®

Design/System/Construction/Assembly Usage Disclaimer

- Authorities Having Jurisdiction should be consulted in all cases as to the particular requirements covering the installation and use of UL Certified products, equipment, system, devices, and materials.
- Authorities Having Jurisdiction should be consulted before construction.
- Fire resistance assemblies and products are developed by the design submitter and have been investigated by UL for compliance with applicable requirements. The published information cannot always address every construction nuance encountered in the field.
- When field issues arise, it is recommended the first contact for assistance be the technical service staff provided by the product manufacturer noted for the design. Users of fire resistance assemblies are advised to consult the general Guide Information for each product category and each group of assemblies. The Guide Information includes specifics concerning alternate materials and alternate methods of construction.
- Only products which bear UL's Mark are considered Certified.

BXUV - Fire Resistance Ratings - ANSI/UL 263 Certified for United States
BXUV7 - Fire Resistance Ratings - CAN/ULC-S101 Certified for Canada
See General Information for Fire-resistance Ratings - ANSI/UL 263 Certified for United States
Design Criteria and Allowable Variances

See General Information for Fire Resistance Ratings - CAN/ULC-S101 Certified for Canada
Design Criteria and Allowable Variances

Design No. **U906**

January 14, 2026

Bearing Wall Rating — 2 HR.
Nonbearing Wall Rating — 2 HR.
This design was evaluated using a load design method other than the Limit States Design Method (e.g., Working Stress Design Method). For jurisdictions employing the Limit States Design Method, such as Canada, a load restriction factor shall be used — See Guide BXUV or BXUV7

*** Indicates such products shall bear the UL or cUL Certification Mark for jurisdictions employing the UL or cUL Certification (such as Canada), respectively.**

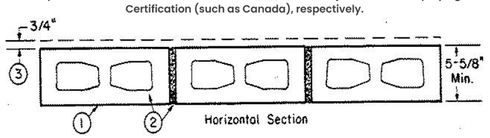

1. **Concrete Blocks* —** Nominal 6 by 8 by 16 in, hollow or solid. Various designs. Classification (2 hr). See **Concrete Blocks** category for list of eligible manufacturers.

ANCHOR CONCRETE PRODUCTS INC

GAGNE & SON CONCRETE BLOCK INC

GLENWOOD MASONRY PRODUCTS

Allowable compressive stress of 57% of max allowable compressive stress in accordance with the empirical design method.

OLDCASTLE APG SOUTH INC, DBA ADAMS PRODUCTS

WESTBROOK CONCRETE BLOCK CO INC

Allowable compressive stress of 75.6% of max allowable compressive stress in accordance with the empirical design method.

2. **Mortar —** Blocks laid in full bed of mortar, nom. 3/8 in. thick, of not less than 2-1/4 and not more than 3-1/2 parts of clean sharp sand to 1 part Portland cement (proportioned by volume) and not more than 50 percent hydrated lime (by cement volume). Vertical joints staggered.

3. **Portland Cement Stucco or Gypsum Plaster —** Add 1/2 hr to Classification if used. Attached to concrete blocks (Item 1).

4. **Foamed Plastic* —** (Optional-Not Shown) — 1-1/2 in. thick max, 4 ft wide sheathing attached to concrete blocks (Item 1).
ATLAS ROOFING CORP — EnergyShield Pro Wall Insulation, EnergyShield Pro 2 Wall Insulation, EnergyShield CGF Pro, EnergyShield Ply Pro, EnergyShield® CGF, EnergyShield® PanelCast, EnergyShield® and "EnergyShield® XR

DUPONT DE NEMOURS, INC. — Types Thermax Sheathing, Thermax Light Duty Insulation, Thermax Heavy Duty Insulation, Thermax Metal Building Board, Thermax White Finish Insulation, Thermax ci Exterior Insulation, Thermax XARMOR ci Exterior Insulation, Thermax IH Insulation, Thermax Plus Liner Panel, Thermax Heavy Duty Plus (HDP), TUFF-R™ ci Insulation, Thermax Butler Stylwall Insulation Board and Thermax Morton Heavy Duty Insulation Board

Amrize Building Envelope LLC — "Enverge™ CI Foil Exterior Wall Insulation" and "Enverge™ CI Glass Exterior Wall Insulation"

HUNTER PANELS, A DIVISION OF CARLISLE CONSTRUCTION MATERIALS, LLC — Types "Xci-Class A", "Xci 286", "Xci Foil (Class A)"

RMAX, A BUSINESS UNIT OF SIKA CORPORATION — Types "TSX-8500", "ECOMAXci FR", "TSX-8510", "ECOMAX xi FR White", "ECOMAXci", "ECOMAXci FR Air Barrier", "Thermasheath-XP", "Thermasheath", "Durasheath"

JOHNS MANVILLE — Type "AP Foil-Faced Foam Sheathing"

4A. **Building Units* —** As an alternate to Item 4, min. 1-in thick polyisocyanurate composite foamed plastic insulation boards, nom. 48 by 48 or 96 in.

ATLAS ROOFING CORP — EnergyShield® Ply

RMAX, A BUSINESS UNIT OF SIKA CORPORATION — "Thermasheath-SI", "ECOBASEci", "ThermaBase-CI", "ECOMAXci FR Ply", "ECOMAXci Ply"

4B. **Foamed Plastic* — (Optional — Not Shown)** — As an alternate to Item 4 - Expanded polystyrene insulation installed at a maximum nominal density of 2.0 lb/ft^3 attached to concrete blocks (Item 1).

BASF CORP STYRENIC FOAMS DIV — Neopor® GPS and NeoTherm GPS

*** Indicates such products shall bear the UL or cUL Certification Mark for jurisdictions employing the UL or cUL Certification (such as Canada), respectively.**

Last Updated on 2026-01-14

UL Solutions permits the reproduction of the material contained in Product iQ subject to the following conditions: 1. The Guide Information, Assemblies, Constructions, Designs, Systems, and/or Certifications (files) must be presented in their entirety and in a non-misleading manner, without any manipulation of the data (or drawings). 2. The statement "Reprinted from Product iQ with permission from UL Solutions" must appear adjacent to the extracted material. In addition, the reprinted material must include a copyright notice in the following format: "©2026 UL LLC."

LIFE SAFETY GENERAL NOTES

1. ALL PENETRATIONS THROUGH FIRE RATED ASSEMBLIES SHALL BE SEALED AS REQUIRED BY BUILDING AND FIRE CODES AND AS BY GOVERNING AUTHORITIES.
2. VERIFY LOCATIONS FOR FIRE ALARM PULL STATIONS, FIRE ALARM ANNUNCIATOR PANEL, FIRE ALARM REMOTE CONTROL PANEL, EMERGENCY LIGHTING , STROBES AND AUDIBLE ALERTS.
3. INSTALL FIRE EXTINGUISHERS IN ACCORDANCE WITH NFPA 10 BY A LICENSED FIRE EQUIPMENT DEALER. INSPECT, TAG, AND MOUNT ALL FIRE EXTINGUISHERS. SEE LOCATION IN PLAN
4. ALL PANIC AND FIRE EXIT HARDWARE TO BE COMPLIANT WITH FBC SECTION 1008.1.10
5. FINAL EXIT SIGNS AND EMERGENCY LIGHTING LOCATIONS ARE SUBJECT TO THE APPROVAL OF THE GOVERNING JURISDICTION. APPLICABLE SIGNAGE SHALL BE PROVIDED BY CONTRACTOR AND COORDINATE WITH OTHER BUILDING SIGNAGE. REFER TO FBC SECTION 1013.4 FOR RAISED CHARACTER AND BRAILLE EXIT SIGN REQUIREMENTS.

LIFE SAFETY PLAN LEGEND

*COORDINATE ITEMS W/ ELECTRICAL AS REQUIRED

	ILLUMINATED (DIRECTIONAL) EXIT SIGN
FEC	RECESSED FIRE EXTINGUISHER CABINET
FE	WALL HUNG FIRE EXTINGUISHER
1001X	DOOR TAG
200	TOTAL EXIT ACCESS TRAVEL DISTANCE (FEET)
	1 HR FIRE SEPARATION WALL
OL	OCCUPANT LOAD SIGN PER FBC 1004.9

OCCUPANCY LOAD TABLE - BUILDING 2

NUMBER	ROOM NAME	AREA	OCCUPANCY TYPE	FUNCTION OF SPACE	OCC LOAD FACTOR	OCCUPANT TOTAL
200	storage	952 SF	S/M		300	4
201	cart wash	1052 SF				
202	fueling	334 SF				
203	fuel tanks	286 SF				
204	sand storage 4	340 SF				
205	sand storage 3	340 SF				
206	sand storage 2	340 SF				
207	sand storage 1	1626 SF				
Grand total: 8		5272 SF				4

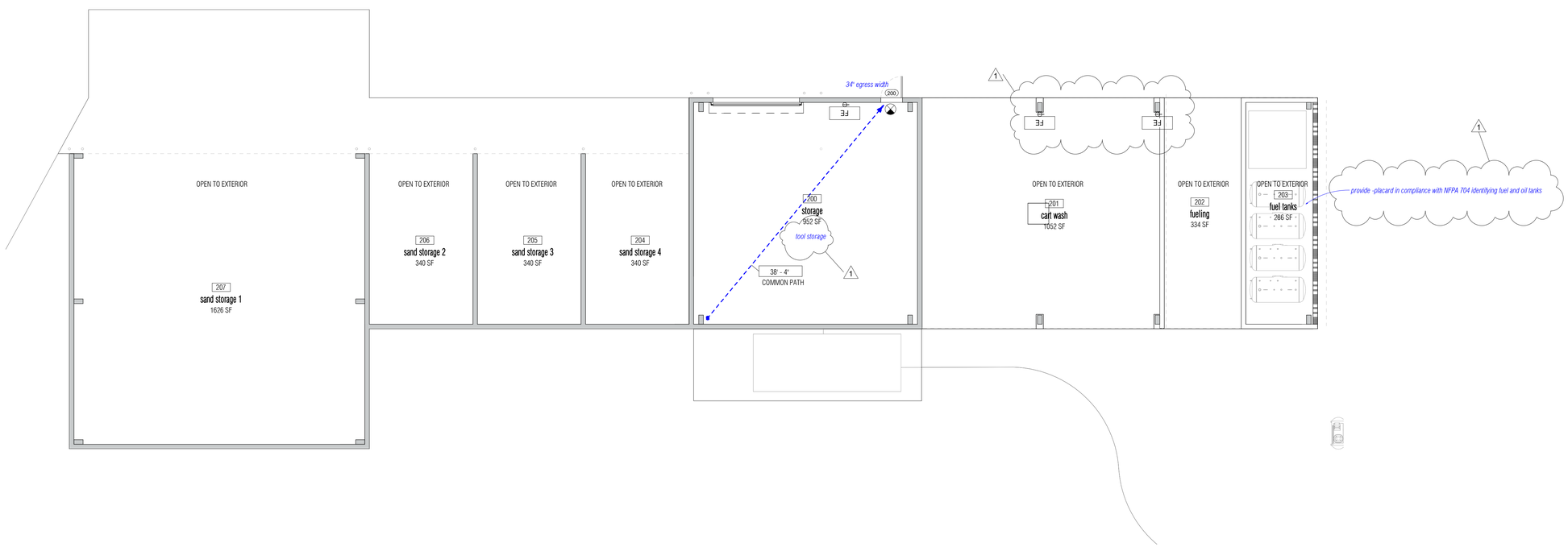

1 **BUILDING 2 - LIFESAFETY PLAN**
1/8" = 1'-0"

LAFATE WILSON
architects

1030 arlington ave n, st petersburg fl 33705
(727) 490-9483
studio@lafatewilson.com

THE ARCHITECT'S COMMON LAW COPYRIGHT AND OTHER PROPERTY RIGHTS ARE HEREBY RESERVED IN THE IDEAS, DESIGNS, PLANS, DRAWINGS, AND SPECIFICATIONS SHALL NOT BE REPRODUCED OR CONVEYED IN ANY MANNER NOR ASSIGNED TO ANY THIRD PARTY WITHOUT FIRST OBTAINING THE EXPRESS WRITTEN PERMISSION OF THE ARCHITECT.

OLD MEMORIAL

13600 National Golf Dr
Tampa, FL 33626

no.	description	date
	PERMIT SET	04.24.26
1	REVISION 01	06.19.26

A2-100

LIFESAFETY PLAN

sheet size 24" x 36"

Reviewed for Code Compliance
With The Florida Building Code
ECS, Florida LLC
41-5640-BLD2 7/20/2026

Electrical Review - Roger Sanders PX651 - Reviewed - 7/14/2026
Mechanical Review - Roger Sanders PX651 - Reviewed - 7/14/2026
Plumbing Review - Roger Sanders PX651 - Reviewed - 7/14/2026
Fire Review - Jay Traina - NA to Private Provider - 7/16/2026
Building Review - Roger Sanders PX651 - Reviewed - 7/14/2026

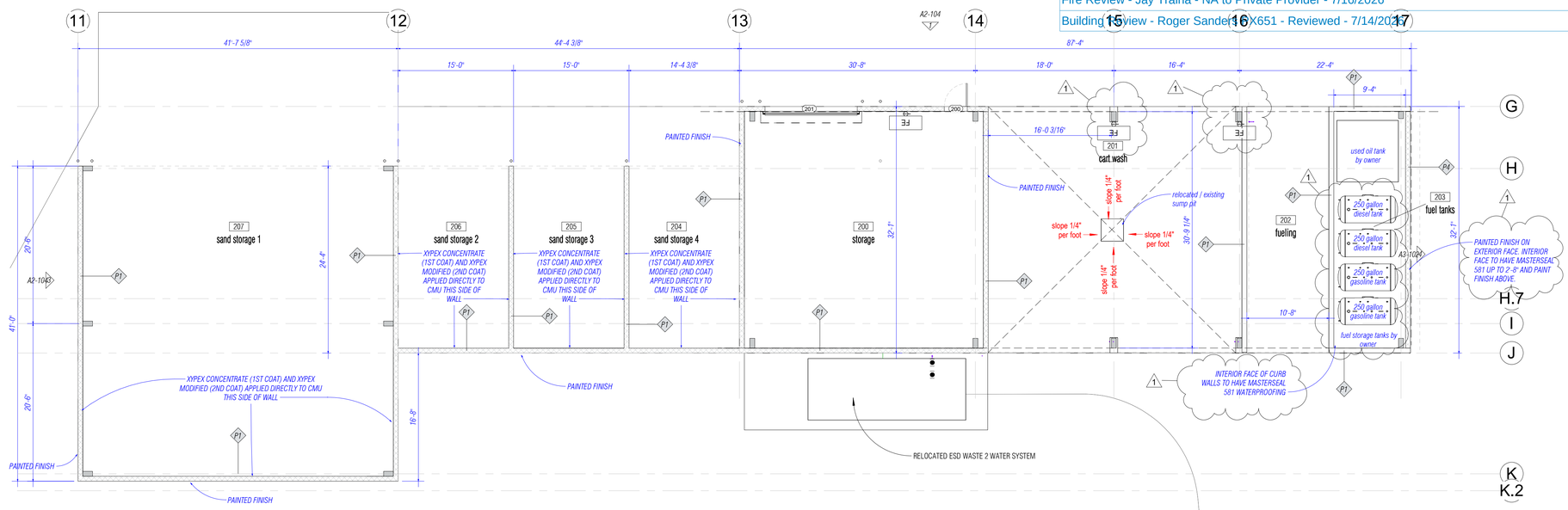

north 1 BUILDING 2 - FLOOR PLAN
1/8" = 1'-0"

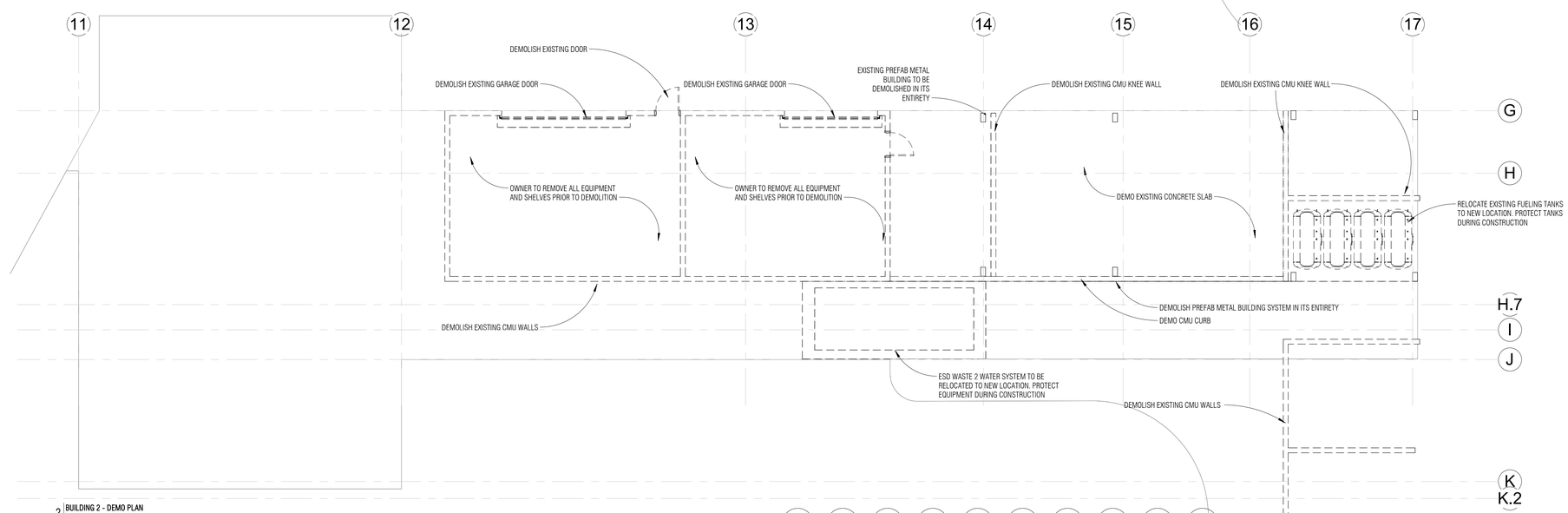

2 BUILDING 2 - DEMO PLAN
1/8" = 1'-0"

#	WIDTH	HEIGHT	TYPE	FRAME MATERIAL	FRAME FINISH	DOOR MATERIAL	DOOR FINISH	HARDWARE
200	3' - 0"	6' - 8"	D1	HM	PAINTED	HM	PAINTED	04
201	12' - 0"	11' - 8"	D3	STEEL		STEEL	WHITE	20

DOOR SCHEDULE

NOTE: VERIFY ALL WINDOW AND DOOR ROUGH OPENING SIZES WITH MANUFACTURER'S REQUIREMENTS

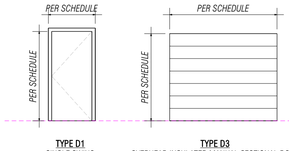

TYPE D1
SINGLE SWING

TYPE D3
OVERHEAD INSULATED MANUAL SECTIONAL DOOR
BASIS OF DESIGN: OVERHEAD DOOR - MODEL 422 - RIBBED PANEL WHITE

Hardware Group No. 04

For use on Door #(s):
20

Provide each SGL door(s) with the following:

QTY		DESCRIPTION	CATALOG NUMBER		FINISH	MFR
3	EA	HINGE	5BB1 4.5 X 4.5 NRP		630	IVE
1	EA	STOREROOM LOCK	ND80PRD RHO		626	SCH
1	EA	SURFACE CLOSER	4040XP SCUSH		689	LCN
1	EA	KICK PLATE	8400 10" X 2" LDW B-CS		630	IVE
1	EA	RAIN DRIP	142AA (IF EXPOSED ABOVE)		AA	ZER
1	EA	GASKETING	188SBK PSA		BK	ZER
1	EA	DOOR SWEEP	328AA		AA	ZER
1	EA	THRESHOLD	65A		A	ZER

Hardware Group No. 20

For use on Door #(s):
201

Provide each RU door(s) with the following:

QTY		DESCRIPTION	CATALOG NUMBER	FINISH	MFR
1	EA	ALL HARDWARE BY ROLL UP DOOR MANUFACTURER			

GENERAL NOTES - DEMOLITION

1. ALL DIMENSIONS AND CONDITIONS TO BE FIELD VERIFIED BY CONTRACTOR PRIOR TO WORK. NOTIFY ARCHITECT IF CONFLICTS ARE FOUND
2. PROTECT ALL AREAS TO REMAIN. G.C. TO REPAIR OR REPLACE ANY ITEM TO REMAIN OR TO BE RELOCATED THAT IS DAMAGED DURING THE WORK. PROVIDE A SEAMLESS, UNDAMAGED APPEARANCE WHEN JOINING NEW TO EXISTING
3. REMOVE DASHED PORTION OF EXISTING WALLS, DOORS, WINDOWS, SIDELIGHTS, TRANSOMS, AND FRAMES. PREPARE AREA TO RECEIVE NEW CONSTRUCTION AS SCHEDULED.
4. FIRE RESISTANCE - MAINTAIN INTEGRITY OF EXISTING FIRE AND/OR SMOKE PARTITIONS THROUGHOUT, UNLESS OTHERWISE NOTED. MAINTAIN INTEGRITY OF ALL EXISTING FIREPROOFING, FIRE STOPPING, COLUMN ENCLOSURES, ETC. TO ENSURE FIRE RESISTANCE MEETS OR EXCEEDS THAT ORIGINALLY REQUIRED OR SPECIFIED. PATCH ALL AREAS DAMAGED OR REMOVED DUE TO NEW CONSTRUCTION TO MATCH THAT OF THE EXISTING OR AS REQUIRED FOR NEW.
5. FINISHES - ALL EXISTING FINISHES SHALL REMAIN, UNLESS SCHEDULED FOR NEW. CONTINUE EXISTING FINISHES TO REMAIN INTO NEW EXTENDED AREAS THAT ARE ADJACENT. PATCH & REPAIR EXISTING TO MATCH NEW. PREPARE SUBSTRATES TO RECEIVE NEW FINISHES WHERE SCHEDULED. FINISH ALL PATCHED OR EXTENDED WALLS TO NEAREST CHANGE OF DIRECTION, WALL TERMINATION, OR INTERSECTION. PHASING - COORDINATE EQUIPMENT DELIVERIES AND INSTALLATION WITH THE PHASING PLAN FOR APPROPRIATE SCHEDULING.
6. CONFLICTS - ANY CONFLICT FOUND WITH EXISTING CONDITIONS AND REQUIREMENTS FOR NEW CONSTRUCTION SHALL BE IMMEDIATELY BROUGHT TO THE ATTENTION OF THE ARCHITECT. IF THE CONFLICT AFFECTS THE PROGRESS OF THE WORK, VERIFY WITH ARCHITECT SOLUTION NECESSARY PRIOR TO PROCEEDING WITH THAT PORTION OF THE WORK AND IN A TIMELY FASHION SO AS NOT TO DELAY THE WORK. COORDINATE ALL TRADES TO ASCERTAIN NO FURTHER WORK WILL BE IMPACTED BY THE CONFLICT, OR ITS SOLUTION.

GENERAL FLOOR PLAN NOTES

1. PROVIDE SUPPORT FOR WALL MOUNTED CABINETS AND PLUMBING FIXTURES. STEEL STUDS SUPPORTING WALL MOUNTED FIXTURES TO BE DOUBLED AT 16 O.C. OR NOT LESS THAN 20 GAUGE PER FBC 2517.5.1.1.
2. PROVIDE CEMENTITIOUS BACKER BOARD IN PLACE OF GWB AT ALL LOCATIONS SHOWING TILE FINISH.

LEGEND

EXISTING WALL TO REMAIN

EXISTING TO BE REMOVED

EXISTING TO REMAIN

WALL TYPES

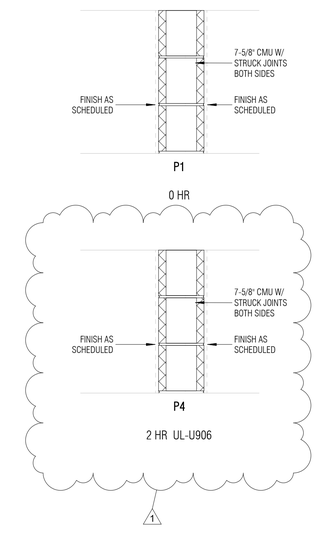

LAFATE WILSON
architects

1030 arlington ave n, st petersburg fl 33705
(727) 490-9483
studio@lafatewilson.com

THE ARCHITECT'S COMMON LAW COPYRIGHT AND OTHER PROPERTY RIGHTS ARE HEREBY RESERVED IN THE IDEAS, DESIGNS, PLANS, DRAWINGS, AND SPECIFICATIONS SHALL NOT BE REPRODUCED OR CONVEYED IN ANY MANNER NOR ASSIGNED TO ANY THIRD PARTY WITHOUT FIRST OBTAINING THE EXPRESS WRITTEN PERMISSION OF THE ARCHITECT.

OLD MEMORIAL

13600 National Golf Dr
Tampa, FL 33626

no.	description	date
	PERMIT SET	04.24.26
1	REVISION 01	06.19.26

A2-101

FLOOR PLAN

sheet size 24" x 36"

Reviewed for Code Compliance
With The Florida Building Code
ECS, Florida LLC
41-5640-BLD2 7/20/2026

Electrical Review - Roger Sanders PX651 - Reviewed - 7/14/2026
Mechanical Review - Roger Sanders PX651 - Reviewed - 7/14/2026
Plumbing Review - Roger Sanders PX651 - Reviewed - 7/14/2026
Fire Review - Jay Traina - NA to Private Provider - 7/16/2026
Building Review - Roger Sanders PX651 - Reviewed - 7/14/2026

CEILING LEGEND

- EXPOSED STRUCTURE
- SURFACE MOUNTED FIXTURE
- EM LIGHT

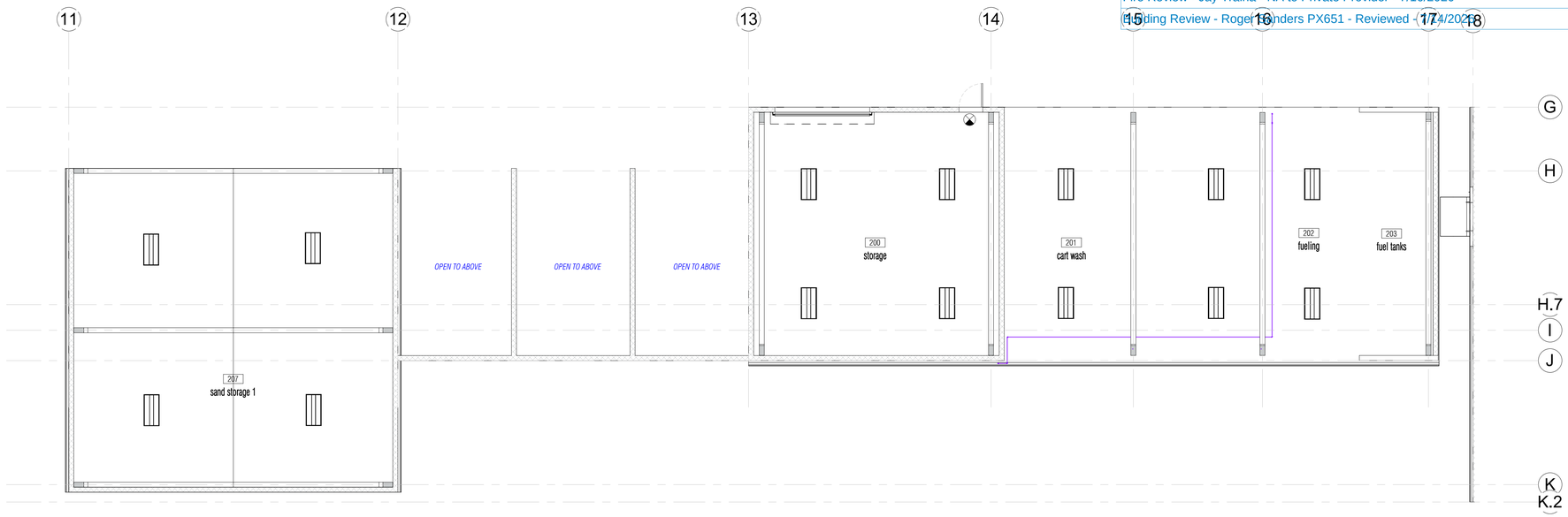

1 BUILDING 2 - RCP
1/8" = 1'-0"

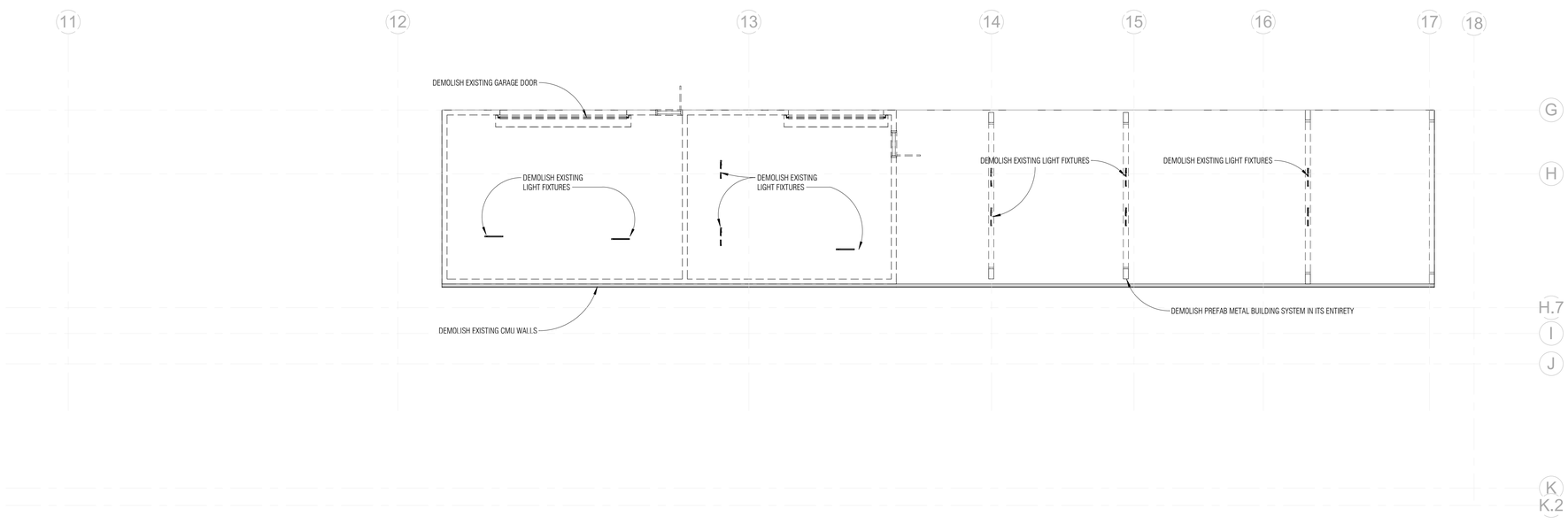

2 BUILDING 2 - DEMO RCP
1/8" = 1'-0"

LAFATE WILSON
architects

1030 arlington ave n, st petersburg fl 33705
(727) 490-9483
studio@lafatewilson.com

THE ARCHITECT'S COMMON LAW COPYRIGHT AND OTHER PROPERTY RIGHTS ARE HEREBY RESERVED IN THE IDEAS, DESIGNS, PLANS, DRAWINGS, AND SPECIFICATIONS SHALL NOT BE REPRODUCED OR CONVEYED IN ANY MANNER NOR ASSIGNED TO ANY THIRD PARTY WITHOUT FIRST OBTAINING THE EXPRESS WRITTEN PERMISSION OF THE ARCHITECT.

OLD MEMORIAL

13600 National Golf Dr
Tampa, FL 33626

no.	description	date
	PERMIT SET	04.24.26

A2-102

CEILING PLAN

sheet size 24" x 36"

Reviewed for Code Compliance
With The Florida Building Code
ECS, Florida LLC
41-5640-BLD2 7/20/2026

Electrical Review - Roger Sanders PX651 - Reviewed - 7/14/2026
~~Mechanical Review - Roger Sanders PX651 - Reviewed - 7/14/2026~~
Plumbing Review - Roger Sanders PX651 - Reviewed - 7/14/2026
Fire Review - Jay Traina - NA to Private Provider - 7/16/2026
Building Review - Roger Sanders PX651 - Reviewed - 7/14/2026

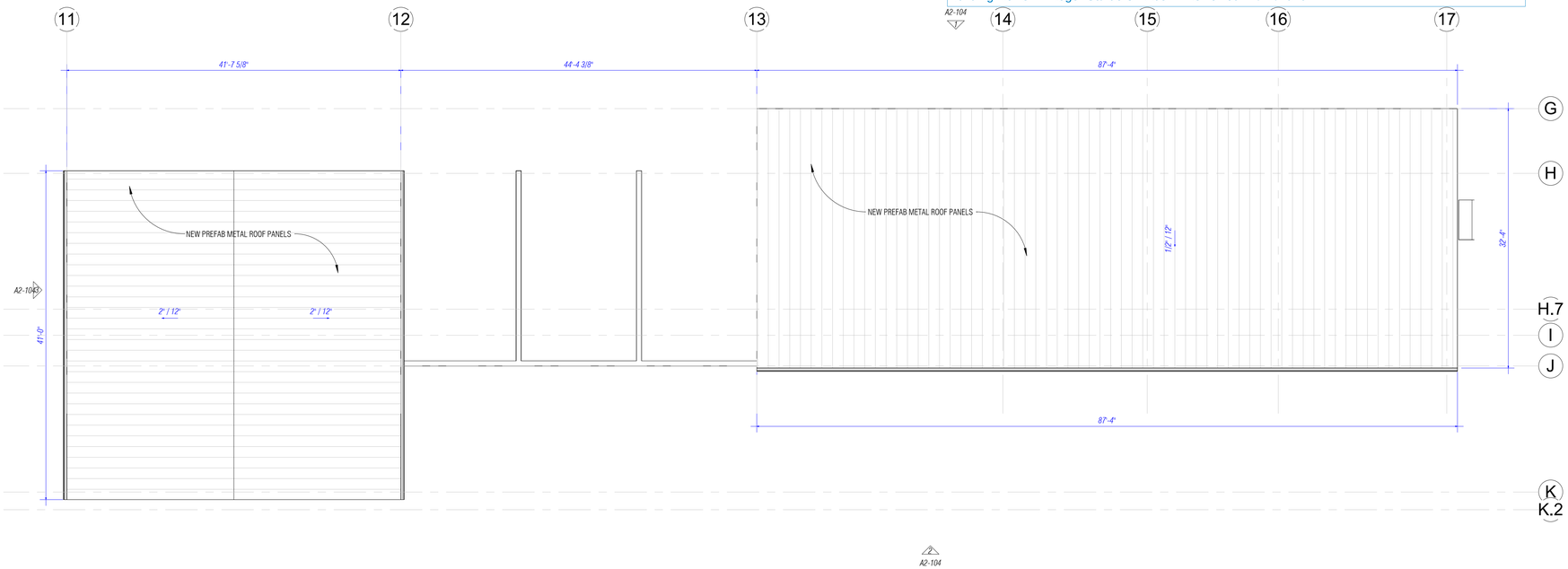

1 BUILDING 2 - ROOF PLAN
1/8" = 1'-0"

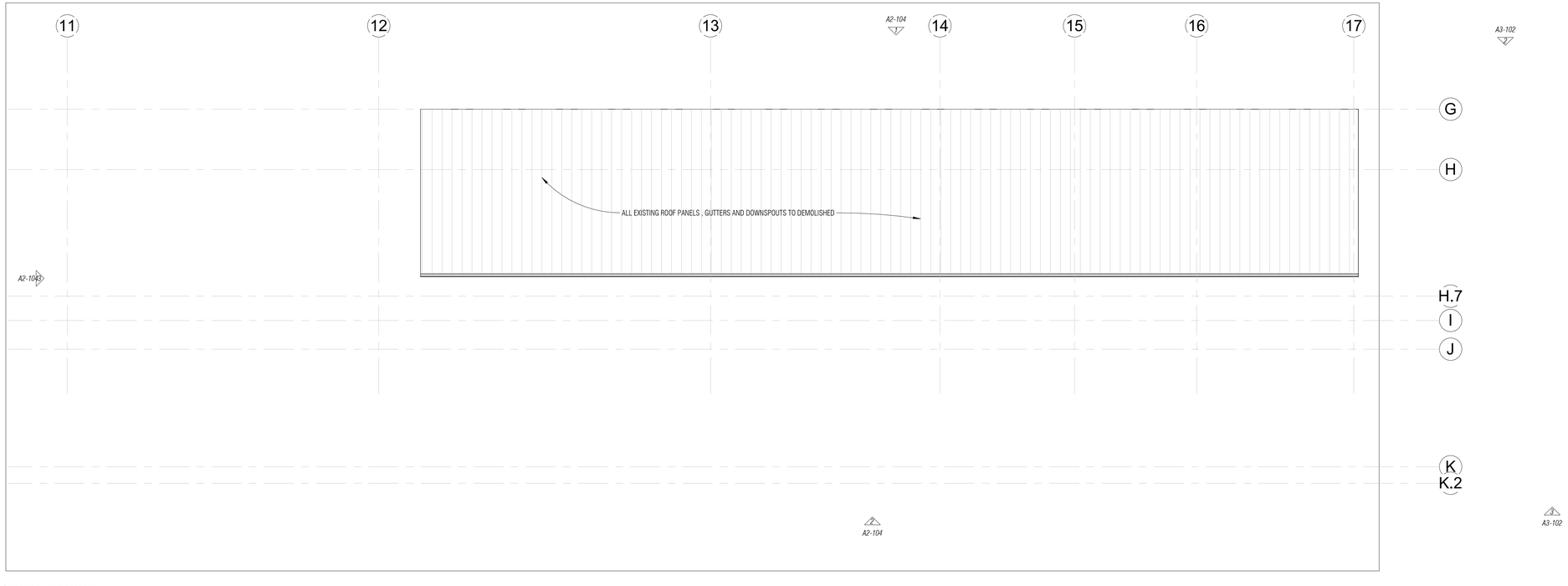

2 BUILDING 2 - DEMO ROOF PLAN
1/8" = 1'-0"

LAFATE WILSON
architects

1030 arlington ave n, st petersburg fl 33705
(727) 490-9483
studio@lafatewilson.com

THE ARCHITECT'S COMMON LAW COPYRIGHT AND OTHER PROPERTY RIGHTS ARE HEREBY RESERVED IN THE IDEAS, DESIGNS, PLANS, DRAWINGS, AND SPECIFICATIONS SHALL NOT BE REPRODUCED OR CONVEYED IN ANY MANNER NOR ASSIGNED TO ANY THIRD PARTY WITHOUT FIRST OBTAINING THE EXPRESS WRITTEN PERMISSION OF THE ARCHITECT.

OLD MEMORIAL

13600 National Golf Dr
Tampa, FL 33626

no.	description	date
	PERMIT SET	04.24.26

A2-103

ROOF PLAN

sheet size 24" x 36"

Reviewed for Code Compliance
With The Florida Building Code
ECS, Florida LLC
41-5640-BLD2 7/20/2026

Electrical Review - Roger Sanders PX651 - Reviewed - 7/14/2026
Mechanical Review - Roger Sanders PX651 - Reviewed - 7/14/2026
Plumbing Review - Roger Sanders PX651 - Reviewed - 7/14/2026
Fire Review - Jay Traina - NA to Private Provider - 7/16/2026
Building Review - Roger Sanders PX651 - Reviewed - 7/14/2026

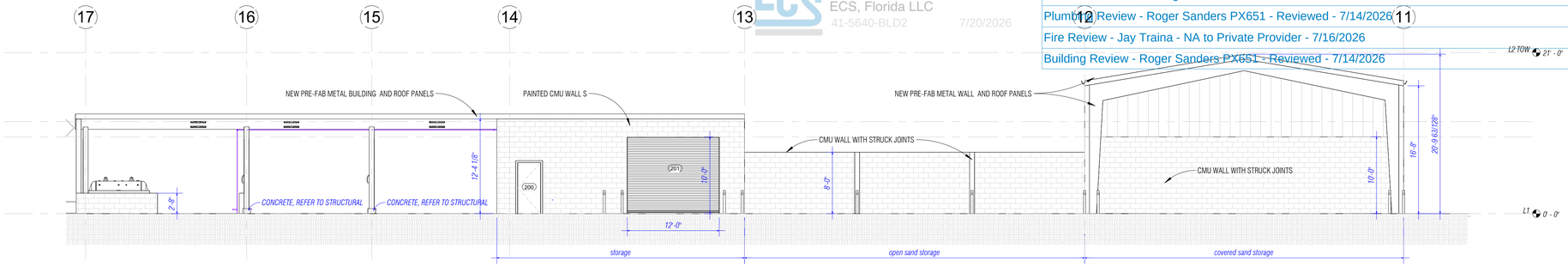

1 sand & chem storage - north elevation
1/8" = 1'-0"

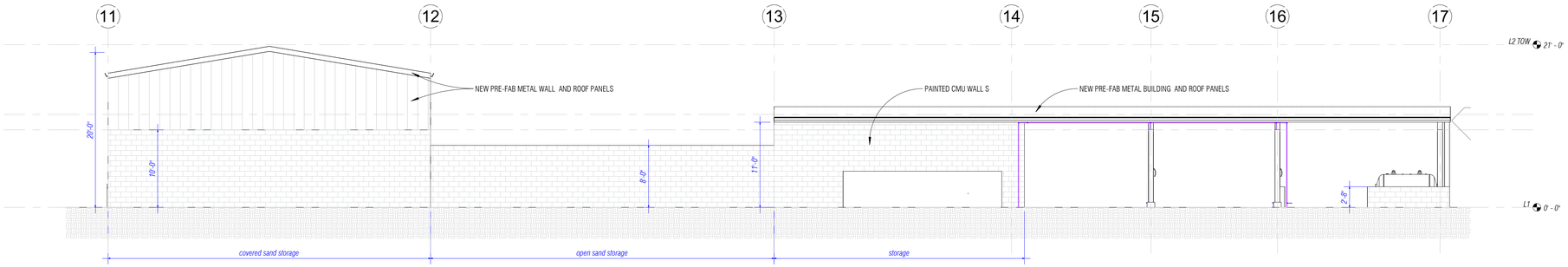

2 sand & chem storage - south elevation
1/8" = 1'-0"

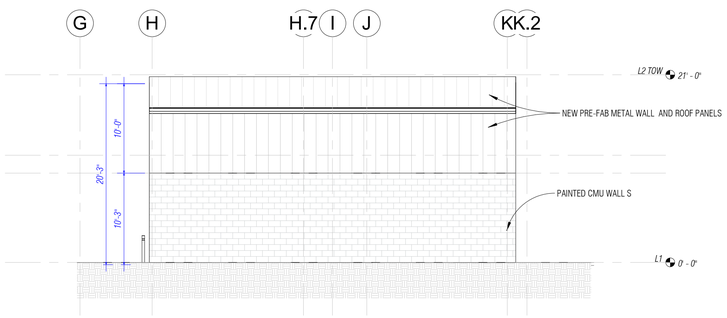

3 sand storage - west elevation
1/8" = 1'-0"

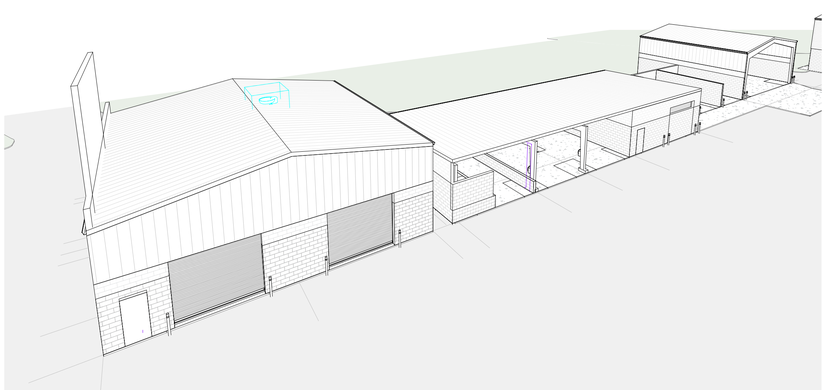

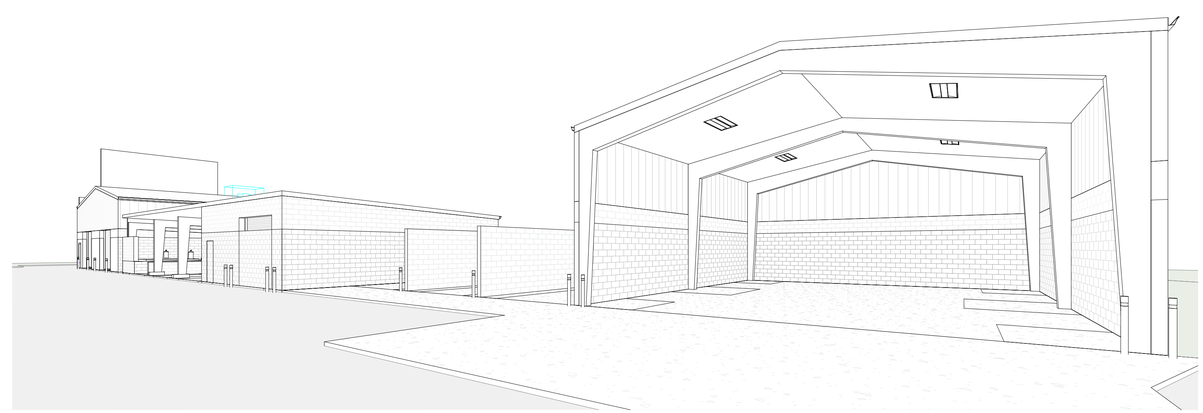

LAFATE WILSON
architects

1030 arlington ave n, st petersburg fl 33705
(727) 490-9483
studio@lafatewilson.com

THE ARCHITECT'S COMMON LAW COPYRIGHT AND OTHER PROPERTY RIGHTS ARE HEREBY RESERVED IN THE IDEAS, DESIGNS, PLANS, DRAWINGS, AND SPECIFICATIONS SHALL NOT BE REPRODUCED OR CONVEYED IN ANY MANNER NOR ASSIGNED TO ANY THIRD PARTY WITHOUT FIRST OBTAINING THE EXPRESS WRITTEN PERMISSION OF THE ARCHITECT.

OLD MEMORIAL

13600 National Golf Dr
Tampa, FL 33626

no.	description	date
	PERMIT SET	04.24.26

A2-104
ELEVATIONS

sheet size 24" x 36"

Reviewed for Code Compliance
With The Florida Building Code
ECS, Florida LLC
41-5640-BLD2 7/20/2026

Electrical Review - Roger Sanders PX651 - Reviewed - 7/14/2026
Mechanical Review - Roger Sanders PX651 - Reviewed - 7/14/2026
Plumbing Review - Roger Sanders PX651 - Reviewed - 7/14/2026
Fire Review - Jay Traina - NA to Private Provider - 7/16/2026
Building Review - Roger Sanders PX651 - Reviewed - 7/14/2026

GN. GENERAL

1. THE STRUCTURAL DRAWINGS AND SPECIFICATIONS ARE A PORTION OF THE CONSTRUCTION DOCUMENTS. THE CONTRACTOR AND SUBCONTRACTORS SHALL REFERENCE, AND COORDINATE WITH ALL OTHER DISCIPLINE'S DRAWINGS. ANY DISCREPANCIES OR OMISSIONS SHALL BE REPORTED TO THE STRUCTURAL ENGINEER AND ARCHITECT.

2. DESIGN CRITERIA:

   A. GENERAL BUILDING CODE:
   2023 FLORIDA BUILDING CODE, 8TH EDITION

   B. DESIGN LOAD CRITERIA:
   MINIMUM DESIGN LOADS FOR BUILDINGS AND OTHER STRUCTURES, AMERICAN SOCIETY OF CIVIL ENGINEERS, ASCE 7

   C. FLOOD LOAD CRITERIA:
   FLOOD RESISTANT DESIGN AND CONSTRUCTION, AMERICAN SOCIETY OF CIVIL ENGINEER, ASCE 24

   D. CONCRETE:
   BUILDING CODE REQUIREMENTS FOR STRUCTURAL CONCRETE, AMERICAN CONCRETE INSTITUTE, ACI 318

   E. STRUCTURAL STEEL:
   SPECIFICATIONS FOR STRUCTURAL STEEL BUILDINGS, AMERICAN INSTITUTE OF STEEL CONSTRUCTION, AISC 360

   F. STEEL DECK:
   STANDARD FOR STEEL ROOF DECK, STANDARD FOR NON-COMPOSITE STEEL FLOOR DECK, STANDARD FOR COMPOSITE STEEL FLOOR DECK SLAB, STEEL DECK INSTITUTE, SDI RD, SDI NC, SDI C

   G. MASONRY:
   BUILDING CODE REQUIREMENTS FOR MASONRY STRUCTURES, THE MASONRY SOCIETY, TMS 402

3. DESIGN LOADS
   A. RISK CATEGORY----------II

   B. DEAD LOADS (PSF):
   ANY CHANGES IN CONSTRUCTION MATERIALS FROM THOSE SHOWN ON THE ARCHITECTURAL OR STRUCTURAL DRAWINGS SHALL BE REPORTED BY THE CONTRACTOR THE STRUCTURAL ENGINEER OF RECORD FOR VERIFICATION OF LOAD-CARRYING CAPACITY.

   C. LIVE LOADS (PSF):
   ROOF (REDUCIBLE)----------20
   SLAB ON GRADE----------100
   RESIDENTIAL----------40

   D. WIND LOADS:
   ULTIMATE DESIGN WIND SPEED, Vult (MPH)----------143
   ALLOWABLE DESIGN WIND SPEED, Vasd (MPH)----------111
   EXPOSURE CATEGORY----------B
   INTERNAL PRESSURE COEFFICIENT----------±0.18
   FOR COMPONENT AND CLADDING PRESSURES – SEE TYPICAL DETAILS

   E. SEISMIC LOADS:
   SEISMIC IMPORTANCE FACTOR, Ie----------1.00
   SITE CLASS----------D
   SEISMIC DESIGN CATEGORY----------A
   MAPPED SPECTRAL RESPONSE ACCELERATIONS:
   Ss----------0.069
   S1----------0.031
   DESIGN SPECTRAL RESPONSE ACCELERATION PARAMETERS:
   SDs----------0.061
   SD1----------0.044
   SEISMIC FORCE RESISTING SYSTEM:
   STRUCTURAL INTEGRITY, ASCE 7 SECTION 1.4

   F. RAIN LOADS:
   15-MIN RAIN INTENSITY, I----------7.81
   60-MIN RAIN INTENSITY, I----------4.01
   RAIN LOAD (PSF)----------0.0

   G. FLOOD LOADS:
   FLOOD DESIGN CLASS----------2
   FLOOD ZONE----------X

4. EXISTING CONDITION:

   A. CONTRACTOR TO VERIFY ALL EXISTING DIMENSIONS, ELEVATIONS, AND SITE CONDITIONS PRIOR TO FABRICATION AND CONSTRUCTION. NOTIFY STRUCTURAL ENGINEER AND ARCHITECT OF ANY DISCREPANCIES PRIOR TO FABRICATION AND CONSTRUCTION.

5. SPECIAL INSPECTIONS/STRUCTURAL ENGINEER'S SITE VISITS:

   A. SPECIAL INSPECTIONS ARE REQUIRED FOR THIS PROJECT PER THE OWNER'S QUALITY CONTROL PLANS. REFER TO DRAWINGS.

   B. SITE VISITS BY STRUCTURAL ENGINEER:

   1. STRUCTURAL ENGINEER'S SITE VISITS ARE FOR VISUAL OBSERVATION OF THE IN-PLACE STRUCTURE FOR GENERAL CONFORMANCE TO THE APPROVED CONSTRUCTION DOCUMENTS AT THE TIME OF THE OBSERVATION.

   C. SITE VISITS BY THE STRUCTURAL ENGINEER'S OFFICE DO NOT REPLACE INSPECTIONS AND TESTING BY THE TESTING AGENCY OR SPECIAL INSPECTOR.

6. SUBMITTALS:

   A. REVIEW OF SHOP DRAWINGS AND OTHER SUBMITTALS BY THE STRUCTURAL ENGINEER DOES NOT RELIEVE THE CONTRACTOR OF THE RESPONSIBILITY TO REVIEW AND CHECK SHOP DRAWINGS BEFORE SUBMITTING TO THE STRUCTURAL ENGINEER. THE CONTRACTOR REMAINS SOLELY RESPONSIBLE FOR ERRORS AND OMISSIONS ASSOCIATED WITH THE PREPARATION OF THE SHOP DRAWINGS AS THEY PERTAIN TO MEMBER SIZES, DETAILS, AND DIMENSIONS SPECIFIED IN THE CONTRACT DOCUMENTS. ALL SHOP DRAWINGS MUST BE REVIEWED AND "APPROVED" BY THE CONTRACTOR PRIOR TO SUBMITTAL.

   B. ELECTRONIC SHOP DRAWINGS ARE TO BE SUBMITTED TO THE STRUCTURAL ENGINEER IN .PDF FORMAT.

   C. RESUBMITTED SHOP DRAWINGS SHALL HAVE ALL NOTED CHANGES SINCE THE PREVIOUS SUBMISSION IDENTIFIED BY CLOUDING OR OTHERWISE CLEARLY IDENTIFIED.

   D. SHOP DRAWINGS: THE CONTRACTOR SHALL SUBMIT FOR REVIEW ALL SHOP DRAWINGS AND DELEGATED DESIGN DRAWINGS REFERENCED ON THE SUBMITTAL SCHEDULE SHOWN IN TYPICAL DETAILS. DELEGATED DESIGN DRAWINGS ARE TO BE DESIGNED BY A LICENSED PROFESSIONAL ENGINEER IN THE STATE WHERE THE PROJECT IS LOCATED. CALCULATIONS SIGNED AND SEALED BY THE LICENSED ENGINEER SHALL BE SUBMITTED TO THE ENGINEER OF RECORD FOR REVIEW.

7. ALL DETAILS SHOWN IN THE DRAWINGS ARE TYPICAL. SIMILAR DETAILS APPLY TO SIMILAR CONDITIONS.

8. THE CONTRACTOR IS RESPONSIBLE FOR MEANS, METHODS, TECHNIQUES, SEQUENCING, AND PROCEDURE OF CONSTRUCTION.

9. CONSTRUCTION MATERIALS SHALL BE SPREAD OUT IF PLACED ON FRAMED FLOORS/ROOFS. IT IS THE CONTRACTOR'S RESPONSIBILITY TO ENSURE THAT CONSTRUCTION LOADS DO NOT EXCEED THE NOTED DESIGN LIVE LOADS.

FD. FOUNDATIONS

1. GEOTECHNICAL ENGINEER: VALLEYSHORE ENGINEERING
   GEOTECHNICAL REPORT TITLE: REPORT OF GEOTECHNICAL EXPLORATION, OLD MEMORIAL GOLF CLUB, 9602 SOUTH MOBLEY ROAD, TAMPA, FLORIDA 33556
   JOB NUMBER: P26-0018.2
   REPORT DATE: FEBRUARY 13, 2026

2. SHALLOW FOUNDATION ALLOWABLE BEARING PRESSURES:
   STRIP FOUNDATIONS----------2000 PSF
   SPREAD FOUNDATIONS----------2000 PSF

3. ALL FOUNDATION BEARING SURFACES SHALL BE INSPECTED AND APPROVED BY THE GEOTECHNICAL ENGINEER PRIOR TO PLACING CONCRETE TO ENSURE COMPLIANCE WITH NOTED PRESSURES.

4. FINAL BEARING ELEVATIONS MAY VARY AS REQUIRED TO PROVIDE PROPER BEARING CAPACITY IN AN APPROVED BEARING STRATUM AS DETERMINED BY THE GEOTECHNICAL ENGINEER.

5. FOOTINGS SHALL BE NEATLY EXCAVATED WHERE POSSIBLE AND FREE OF LOOSE OR WET MATERIALS. WHERE SOFT OR UNSUITABLE BEARING SURFACES ARE ENCOUNTERED, THE AREA SHALL BE UNDERCUT AS REQUIRED AND REPLACED WITH LEAN CONCRETE OR COMPACTED, DENSE GRADED STONE AS DIRECTED BY THE GEOTECHNICAL ENGINEER.

6. FOOTINGS SHALL BE PLACED THE SAME DAY AS INSPECTED BY THE GEOTECHNICAL ENGINEER UNLESS OTHERWISE DIRECTED BY THE GEOTECHNICAL ENGINEER.

7. COMPACTED FILL SHALL MEET THE REQUIREMENTS NOTED IN THE GEOTECHNICAL REPORT. EXCAVATED MATERIAL MAY BE USED AS BACKFILL WITH WRITTEN APPROVAL FROM THE GEOTECHNICAL ENGINEER STATING THAT SUCH MATERIAL IS SUITABLE AS BACKFILL AND INSTRUCTIONS ARE GIVEN FOR PROPER MOISTURE CONTENT AND COMPACTION.

8. FOUNDATION AND RETAINING WALLS SHALL NOT BE BACKFILLED UNTIL CONCRETE HAS REACHED NOTED 28-DAY COMPRESSIVE STRENGTH.

9. PROVIDE 4" OF COMPACTED GRANULAR FILL BENEATH ALL SLABS ON GRADE. PROVIDE 10 MIL VAPOR RETARDER BETWEEN BOTTOM OF SLAB AND TOP OF GRANULAR FILL.

CN. CONCRETE

1. CONCRETING OPERATIONS SHALL COMPLY WITH ACI STANDARDS.

2. REINFORCING BARS USED IN CONCRETE SHALL MEET ASTM A615, GRADE 60.

3. WELDED WIRE REINFORCEMENT (WWR) USED IN CONCRETE SHALL MEET ASTM A185. MINIMUM LAB AND EMBEDMENT TO BE THE GREATER OF ONE CROSS WIRE SPACING + 2", OR 6".

4. REINFORCING BARS SHOWN IN SECTIONS AND DETAILS ARE A SCHEMATIC REPRESENTATION OF THE MEMBER REINFORCEMENT. SEE SCHEDULES, SECTION NOTES, AND GENERAL NOTES FOR ACTUAL REINFORCEMENT REQUIRED. DO NOT SCALE OFF OF SECTIONS.

5. DETAILING, FABRICATION, AND PLACEMENT OF REINFORCEMENT AND ANY ACCESSORIES SHALL BE IN ACCORDANCE WITH ACI 315, GUIDE TO PRESENTING REINFORCING STEEL DESIGN DETAILS. FABRICATION OF REINFORCEMENT STEEL CANNOT BEGIN TILL ENGINEER OF RECORD HAS REVIEWED AND APPROVED SHOP DRAWINGS. SEE SUBMITTAL SCHEDULE FOR SHOP DRAWING REQUIREMENTS.

6. SPLICES SHALL BE CLASS "B" TENSION LAP SPLICES UNLESS NOTED. REINFORCEMENT MARKED CONTINUOUS SHALL BE SPLICED WITH A CLASS "B" TENSION LAP SPLICE. BARS SHALL BE IN CONTACT WHEN MAKING A LAP SPLICE UNLESS OTHERWISE NOTED.

7. DO NOT WELD REINFORCEMENT WITHOUT PRIOR APPROVAL FROM THE ENGINEER OF RECORD.

SS. STRUCTURAL STEEL

1. FABRICATE AND ERECT ALL STRUCTURAL STEEL IN ACCORDANCE WITH AISC "CODE OF STANDARD PRACTICE FOR STEEL BUILDINGS AND BRIDGES".

2. THE STEEL FRAME IS "NON-SELF-SUPPORTING". ADEQUATE TEMPORARY SUPPORT MUST BE PROVIDED BY THE CONTRACTOR TILL THE LATERAL FORCE RESISTING SYSTEM ELEMENTS AND STABILITY OF THE STRUCTURE IS IN PLACE.

3. STRUCTURAL STEEL AND STRUCTURAL STEEL CONNECTIONS MUST CONFORM TO THE FOLLOWING MINIMUM REQUIREMENTS, UNLESS NOTED ELSEWHERE IN THE DOCUMENTS.

   WIDE FLANGE (W & WT) SHAPES, CHANNELS (C & MC)----------ASTM A992
   ALL PLATES, ANGLES (L)----------ASTM A572, GR. 50
   MISCELLANEOUS (M & MT), AMERICAN STANDARD (S & ST), AND WIDE FLANGE BEARING PILES (HP) SHAPES----------ASTM A572 GR. 50
   HOLLOW STRUCTURAL SECTION (HSS)----------ASTM A500, GR.C
   STEEL PIPE----------ASTM A53, GR. B
   HEADED STUDS----------ASTM A108
   BOLTS----------ASTM F3125
   NUTS----------ASTM A563
   ANCHOR RODS----------ASTM F1554 GR. 36
   THREADED ROD----------ASTM A36
   WASHERS (FOR STRUCTURAL BOLTS)----------ASTM F436
   WASHERS (FOR ANCHOR BOLTS)----------ASTM A36
   WELDED CONNECTIONS----------E70XX ELECTRODES

4. BEAMS ARE TO BE SPACED EQUALLY IN BAYS, UNLESS DIMENSIONED ON PLAN.

5. BEAMS SHALL BE ERECTED WITH NATURAL CAMBER ORIENTED UPWARDS.

6. FABRICATE BRACING MEMBERS WITH SUFFICIENT DRAW TO PREVENT SAGGING.

7. HSS MEMBERS SHALL HAVE 1/4" CLOSURE PLATE.

8. GROUT UNDER BASE PLATES SHALL BE NON-SHRINK, NON-METALLIC TYPE. GROUT SHALL HAVE SPECIFIED DESIGN COMPRESSIVE STRENGTH TWO TIMES THAT OF THE SUPPORTING CONCRETE.

9. STRUCTURAL STEEL MEMBERS SHALL NOT BE CUT, SPLICED, OR MODIFIED IN THE FIELD UNLESS NOTED ON THE STRUCTURAL DRAWINGS OR APPROVED BY THE STRUCTURAL ENGINEER OF RECORD.

10. STRUCTURAL STEEL NOT EXPOSED TO VIEW SHALL BE PRIMED WITH THE MANUFACTURER'S STANDARD SHOP PRIMER. STRUCTURAL STEEL EXPOSED TO WEATHER IN ITS FINAL POSITION SHALL BE HOT-DIPPED GALVANIZED IN ACCORDANCE WITH ASTM A123. STRUCTURAL STEEL EXPOSED TO VIEW, REFER TO PROJECT SPECIFICATIONS FOR FINISHED COATING SYSTEM.

11. CONNECTION WORK LINES SHOWN IN THE TYPICAL DETAILS ARE ALONG THE MEMBERS NEUTRAL AXIS UNLESS NOTED.

12. ALL WELD SHALL CONFORM TO THE AMERICAN WELDING SOCIETY STANDARDS AND MUST BE PERFORMED BY A CERTIFIED WELDER.

13. ALL WELD SIZES SHOWN IN THE DRAWINGS ARE CONSIDERED EFFECTIVE WELD SIZES.

14. ALL BOLTED CONNECTIONS SHALL BE BEARING TYPE CONNECTIONS.

15. ALTERNATE CONNECTION DETAILS FROM THOSE SHOWN IN THE TYPICAL DETAILS SHALL BE SUBMITTED BY THE CONTRACTOR TO THE ARCHITECT AND STRUCTURAL ENGINEER OF RECORD FOR APPROVAL.

16. ALL STRUCTURAL STEEL CONNECTIONS ARE TO BE DESIGNED UNDER DIRECT SUPERVISION OF A LICENSED PROFESSIONAL ENGINEER IN THE STATE IN WHICH THE PROJECT IS LOCATED.

17. DESIGN CALCULATIONS FOR THE CONNECTIONS SHALL BE SUBMITTED TO THE STRUCTURAL ENGINEER OF RECORD. CONNECTION CALCULATIONS IN THE CALCULATION PACKAGE SHALL BE REPRESENTATIVE OF THE CONNECTIONS DETAILED IN THE SHOP DRAWINGS. THE CALCULATIONS SHALL BE SIGNED AND SEALED BY A LICENSED PROFESSIONAL ENGINEER IN THE STATE IN WHICH THE PROJECT IS LOCATED.

18. SEE PLAN NOTES FOR BEAM REACTIONS.

SD. STEEL DECK

1. ROOF DECK: WIDE RIB TYPE "WR", STEEL ROOF DECK, 20 GAGE, 1-1/2" DEEP.

2. DECK PROPERTIES, ACCESSORIES, AND ATTACHMENTS SHALL BE ACCORDANCE WITH THE STEEL DECK INSTITUTE (SDI).

3. DECKS SHALL BE CONTINUOUS OVER THREE SPANS.

4. DO NOT SHORE DECK.

5. SHEET STEEL FOR DECKING SHALL BE GRADE A653 SS GR50, MINIMUM.

6. DECK SHALL HAVE A G60 GALVANIZED FINISH.

7. STEEL DECK SHALL HAVE A MINIMUM 1-1/2" BEARING AT END CONDITIONS.

8. STEEL DECK SHALL HAVE A MINIMUM 3" BEARING AT INTERMEDIATE CONDITIONS.

9. LIGHT GAGE FRAMING, SUSPENDED CEILING SYSTEMS, MEP SYSTEMS, AND OTHER UTILITIES SHALL NOT BE SUPPORTED BY THE STEEL ROOF DECK.

MA. MASONRY

1. MASONRY CONSTRUCTION SHALL CONFORM TO TMS 402/602.

2. CONCRETE MASONRY UNITS (CMU) SHALL BE NORMAL WEIGHT (DENSITY = 125 PCF), CONFORMING TO ASTM C90, UNLESS NOTED.

3. COMPRESSIVE STRENGTH OF MASONRY (f'm) IS 2000 PSI AT 28 DAYS.

4. COMPRESSIVE STRENGTH OF GROUT (f'g) IS 2500 PSI AT 28 DAYS. GROUT SHALL CONFORM TO ASTM C476 AND BE PLACED IN ACCORDANCE WITH TMS 602.

5. MORTAR SHALL CONFORM TO ASTM C270, TYPE S OR M FOR TYPICAL CONDITIONS (TYPE M FOR BASEMENT WALLS).

6. MASONRY WALLS SHALL BE LAID IN RUNNING BOND, UNLESS NOTED.

7. ALL BLOCK CELLS BELOW GRADE SHALL BE FILLED WITH CONCRETE OR GROUT.

8. SEE ARCHITECTURAL DRAWINGS FOR LOCATIONS OF CONTROL JOINTS AND OPENINGS.

9. REINFORCING BARS USED IN MASONRY SHALL MEET ASTM A615, GRADE 60.

10. CONDUIT, PIPING, AND SLEEVES OF ANY MATERIAL TO BE EMBEDDED IN MASONRY SHALL COMPLY WITH THE FOLLOWING REQUIREMENTS:

    A. CANNOT BE MADE OF ALUMINUM.

    B. CANNOT PASS THROUGH JAMBS, LINTELS, BOND BEAMS, OR SHEAR WALLS WITHOUT APPROVAL BY THE STRUCTURAL ENGINEER.

    C. REINFORCEMENT BARS CANNOT BE CUT, BENT, OR DISPLACED.

    D. SPACING OF CONDUIT, PIPE, OR SLEEVE SHALL NOT BE CLOSER THAN 3 DIAMETERS ON CENTER. MINIMUM SPACING OF DIFFERENT DIAMETERS SHALL BE DETERMINED BY THE LARGER DIAMETER.

11. TEMPORARY BRACING OF MASONRY WALLS IS THE RESPONSIBILITY OF THE CONTRACTOR AND SHALL REMAIN IN PLACE UNTIL PERMANENT RESTRAINT IS PROVIDED.

12. HORIZONTAL JOINT REINFORCING: LADDER TYPE, 9 GAGE SPACED VERTICALLY AT 16", UNLESS NOTED. PLACE REINFORCING ACCORDING TO MANUFACTURER'S RECOMMENDATIONS. LAP REINFORCING A MINIMUM OF 6".

MB. PRE-ENGINEERED METAL BUILDING

1 THE METAL BUILDING DESIGN SHALL BE BASED ON THE SAME CODE REQUIREMENTS LISTED IN GN.2 AND LOADS LISTED GN.3.

2 THE DESIGN OF PRE-ENGINEERED METAL BUILDING SHALL BE DONE BY, OR UNDER THE SUPERVISION OF A LICENSED ENGINEER IN THE STATE IN WHICH THE BUILDING IS LOCATED.

3 PRELIMINARY REACTIONS SHOWN IN THESE DRAWINGS AND USED IN THE DESIGN OF THE FOUNDATIONS AND ANCHOR BOLT EMBEDMENT COME FROM THE FOLLOWING. FINAL REACTIONS SHALL BE SUPPLIED TO THE ENGINEER OF RECORD PRIOR TO FABRICATION OF THE PRE-ENGINEERED METAL BUILDING AND CONSTRUCTION OF THE FOUNDATIONS.
PRE-ENGINEERED METAL BUILDING SUPPLIER:
REPORT NAME:
REPORT NUMBER:
REPORT DATE:

3 PRELIMINARY REACTIONS SHOWN IN THESE DRAWINGS WERE CALCULATED BY THE ENGINEER OF RECORD BASED ON THE LOADING LISTED IN GN.2 WITHOUT INPUT FROM THE PRE-ENGINEERED METAL BUILDING ENGINEER. FINAL REACTIONS SHALL BE SUPPLIED TO THE ENGINEER OF RECORD PRIOR TO FABRICATION OF THE PRE-ENGINEERED METAL BUILDING AND CONSTRUCTION OF THE FOUNDATIONS.

4. THE PRE-ENGINEERED METAL BUILDING ENGINEER SHALL SPECIFY THE REQUIRED DIAMETER OF ANCHOR BOLTS FOR COLUMN BASE PLATE CONNECTION. ANCHOR ROD EMBEDMENT AND REINFORCEMENT DETAILING SHALL BE DONE BY THE ENGINEER OF RECORD AND SHOWN IN THESE DRAWINGS.

@	AT
&	AND
#	NUMBER OR POUND
%	PERCENT
Ø	DIAMETER
°	DEGREE
ASD	ALLOWABLE STRESS DESIGN
ACI	AMERICAN CONCRETE INSTITUTE
AISC	AMERICAN INSTITUTE OF STEEL CONSTRUCTION
AISI	AMERICAN IRON AND STEEL INSTITUTE
ASTM	AMERICAN SOCIETY FOR TESTING MATERIALS
AWS	AMERICAN WELDING SOCIETY
AFF	ABOVE FINISH FLOOR
ARCH.	ARCHITECT OR ARCHITECTURAL
AESS	ARCHITECTURALLY EXPOSED STRUCTURAL STEEL
AHU	AIR HANDLING UNIT
ALT	ALTERNATE
APPROX	APPROXIMATE
APPRV	APPROVED
B	BOTTOM
BRG	BEARING
BOF	BOTTOM OF FOUNDATION
BOT	BOTTOM
BLDG	BUILDING
BTWN	BETWEEN
CIP	CAST-IN-PLACE
CONC	CONCRETE
CMU	CONCRETE MASONRY UNIT
CRSI	CONCRETE REINFORCING STEEL INSTITUTE
CONT	CONTINUOUS
CJ	CONTROL JOINT
CLR	CLEAR
COL	COLUMN
C	CHANNEL
COMP	COMPRESSION
CONN	CONNECTION
CONTR	CONTRACTOR
DIA	DIAMETER
DIM	DIMENSION
DWLS	DOWELS
DBL	DOUBLE
DEG	DEGREE
DP	DRILLED PIER
EA	EACH
EE	EACH END
EF	EACH FACE
EJ	EXPANSION JOINT
ES	EACH SIDE
EQ	EQUAL
EXP	EXPANSION
EW	EACH WAY
EOD	EDGE OF DECK
EOS	EDGE OF SLAB
ELEC	ELECTRICAL
EMBED	EMBEDMENT
ENGR	ENGINEER
FF	FINISH FACE
FT	FOOT OR FEET
FTG	FOOTING
FDN	FOUNDATION
FV	FIELD VERIFY
FS	FAR SIDE
GALV	GALVANIZED
GA	GAUGE
GR	GRADE
H. STUD	HEADED STUDS
IN	INCH
INV	INVERT
INFO	INFORMATION
JT	JOINT
JST	JOIST
JG	JOIST GIRDER
K	KIP (1000 LBS)
KSF	KIPS PER SQUARE FOOT
KSI	KIPS PER SQUARE INCH
KLF	KIPS PER LINEAR FOOT
LW	LIGHT WEIGHT
LWC	LIGHT WEIGHT CONCRETE
LRFD	LOAD AND RESISTANCE FACTOR DESIGN
LLV	LONG LEG VERTICAL
LLH	LONG LEG HORIZONTAL
LBS	POUNDS
L	ANGLE
MTL	METAL
MIN	MINIMUM
MAX	MAXIMUM
MRF	MANUFACTURER
M	MOMENT
MECH	MECHANICAL
MISC	MISCELLANEOUS
NWC	NORMAL WEIGHT CONCRETE
NIC	NOT IN CONTRACT
NS	NS
N.T.S	NOT TO SCALE
OC	ON CENTER
OPNG	OPENING
OPP	OPPOSITE
PC	PILE CAP
PL	PLATE
PSF	POUNDS PER SQUARE FOOT
PSI	POUNDS PER SQUARE INCH
PCI	POUNDS PER CUPIC FOOT
PLBG	PLUMBING
PLF	POUNDS PER LINEAR FOOT
PT	POST-TENSIONING
R	RADIUS
REINF	REINFORCEMENT
SECT	SECTION
SC	SHEAR CONNECTOR
SHT	SHEET
SLV	SHORT LEG VERTICAL
SIM	SIMILAR
SOG	SLAB ON GRADE
STD	STANDARD
STL	STEEL
SDI	STEEL DECK INSTITUTE
SF	SQUARE FOOT
STIFF	STIFFENER
SUP	SUPPORT
SYM	SYMMETRICAL
STD	STANDARD
T	TOP
TO	TOP OF
TOC	TOP OF CONCRETE
TOF	TOP OF FOOTING
TOS	TOP OF STEEL
TOW	TOP OF WALL
TOPC	TOP OF PILE CAP
TYP	TYPICAL
T	TENSION
UNO	UNLESS NOTED OTHERWISE
US	UNDERSIDE
WWR	WELDED WIRE REINFORCEMENT
W/	WITH
WP	WORK POINT
W/O	WITHOUT

ALIGNED
CIVIL & STRUCTURAL
4527 HUNTINGTON ST NE
ST. PETERSBURG, FL 33703 | 205.913.3482
PROJECT #: 26003
THE DRAWINGS AND DESIGN INTENT ARE THE SOLE PROPERTY OF ALIGNED ENGINEERING AND DESIGN WHICH MAY NOT BE REPRODUCED WITHOUT WRITTEN PERMISSION.

LAFATE WILSON
architects
1030 arlington ave n, st petersburg fl 33705
(727) 490-9483
studio@lafatewilson.com

THE ARCHITECT'S COMMON LAW COPYRIGHT AND OTHER PROPERTY RIGHTS ARE HEREBY RESERVED IN THE IDEAS, DESIGNS, PLANS, DRAWINGS, AND SPECIFICATIONS SHALL NOT BE REPRODUCED OR CONVEYED IN ANY MANNER NOR ASSIGNED TO ANY THIRD PARTY

OLD MEMORIAL

13600 National Golf Dr
Tampa, FL 33626

no.	description	date
	PERMIT SET	4.24.26

S0-101

GENERAL NOTES

sheet size 24"

Reviewed for Code Compliance
With The Florida Building Code
ECS, Florida LLC
41-5640-BLD2 7/20/2026

Electrical Review - Roger Sanders PX651 - Reviewed - 7/14/2026
Mechanical Review - Roger Sanders PX651 - Reviewed - 7/14/2026
Plumbing Review - Roger Sanders PX651 - Reviewed - 7/14/2026
Fire Review - Jay Traina - NA to Private Provider - 7/16/2026
Building Review - Roger Sanders PX651 - Reviewed - 7/14/2026

ALIGNED
CIVIL & STRUCTURAL
4527 HUNTINGTON ST NE
ST. PETERSBURG, FL 33703 | 205.913.3482
PROJECT #: 26003
THE DRAWINGS AND DESIGN INTENT ARE THE SOLE PROPERTY OF ALIGNED ENGINEERING AND DESIGN WHICH MAY NOT BE REPRODUCED WITHOUT WRITTEN PERMISSION.

LAFATE WILSON
architects
1030 arlington ave n, st petersburg fl 33705
(727) 490-9483
studio@lafatewilson.com

THE ARCHITECT'S COMMON LAW COPYRIGHT AND OTHER PROPERTY RIGHTS ARE HEREBY RESERVED IN THE IDEAS, DESIGNS, PLANS, DRAWINGS, AND SPECIFICATIONS SHALL NOT BE REPRODUCED OR CONVEYED IN ANY MANNER NOR ASSIGNED TO ANY THIRD PARTY

Flat Roof Pressures

Area (sq.ft)	Max + Pressure (psf)	Max - Pressure (psf)
Interior Zone 1'		
10	16.0	-47.7
20	16.0	-44.5
50	16.0	-40.4
100	16.0	-37.2
200	16.0	-34.1
≥500	16.0	-29.9
Perimeter Zone 2		
10	16.0	-62.9
20	16.0	-58.9
50	16.0	-53.5
100	16.0	-49.5
200	16.0	-45.4
≥500	16.0	-40.1
Corner Zone 3		
10	16.0	-85.7
20	16.0	-77.6
50	16.0	-66.9
100	16.0	-58.9
200	16.0	-50.8
≥500	16.0	-40.1

1 Flat Roof Components and Cladding Wind Pressures
3/4" = 1'-0"

Gable/Hip Roof Pressures

Area (sq.ft)	Max + Pressure (psf)	Max - Pressure (psf)
Interior Zone 1		
10	24.2	-67.7
20	22.1	-58.2
50	19.2	-45.7
100	17.1	-36.2
200	16.0	-26.7
≥500	16.0	-21.1
Perimeter Zone 2		
10	24.2	-89.4
20	22.1	-77.2
50	19.2	-61.1
100	17.1	-48.9
200	16.0	-36.6
≥500	16.0	-36.6
Corner Zone 3		
10	24.2	-117.4
20	22.1	-100.6
50	19.2	-78.3
100	17.1	-61.5
200	16.0	-61.5
≥500	16.0	-61.5

2 Gable/Hip Roof Components and Cladding Wind Pressures
3/4" = 1'-0"

Wall Pressures

Area (sq.ft)	Max + Pressure (psf)	Max - Pressure (psf)
Interior Zone 4		
10	36.6	-39.8
20	35.0	-38.1
50	32.8	-35.9
100	31.2	-34.3
200	29.5	-32.6
≥500	27.3	-30.4
Corner Zone 5		
10	36.6	-49.1
20	35.0	-45.8
50	32.8	-41.4
100	31.2	-38.1
200	29.5	-34.8
≥500	27.3	-30.4

3 Wall Components and Cladding Wind Pressures
3/4" = 1'-0"

Structural Submittal Schedule

Submittal Type	Description	For Approval	For Record	Signed & Sealed Shop Dwgs	Signed & Sealed Calcs
31600 FOUNDATIONS					
MILD REINFORCEMENT		X			
33000 STRUCTURAL CONCRETE					
CONCRETE MIX DESIGN	SUBMIT MIX DESIGN FOR EACH CONCRETE MIX DESIGN. NOTE THE USAGE FOR EACH PROVIDED DESIGN. PROVIDE MIX RECIPE, BREAK DATE, AND PRODUCT DATA AS REQUIRED BY ACI 301.	X			
CONCRETE ACCESSORIES	VAPOR BARIER, REBAR CHAIRS, ETC.	X			
WELDED WIRE REINFORCEMENT		X			
MILD REINFORCEMENT		X			
CONCRETE FORMWORK			X		
EMBEDDED ITEMS	EMBED PLATES, BEARING PLATES, ETC.	X			
42000 CONCRETE MASONRY UNITS (CMU)					
MASONRY PRODUCT INFORMATION		X			
MILD REINFORCEMENT	VERTICAL REINF, BOND BEAM REINF, LITEL REINF, BENT BAR SCHEDULE	X			
GROUT MIX DESIGNS	MIX DESIGN AND BREAK DATA	X			
MORTAR MIX DESIGNS		X			
MASONRY ACCESSORIES	BAR SPASCERS, HORIZONTAL JOINT REINF, ETC.		X		
PRECAST LINTEL DATA		X			
51200 STRUCTURAL STEEL					
STRUCTURAL STEEL		X		X	
STEEL CONNECTION CALCULATIONS	BEAM-BEAM CONNECTIONS, VERTICAL BRACING, MOMENT CONNECTIONS, ETC.	X			X
STEEL STAIRS		X		X	
STEEL STAIR CALCULATIONS	STAIR MEMBERS AND THEIR CONNECTIONS TO EACHOTHER/TO THE STRUCTURE	X			X
STEEL HANDRAILS		X		X	X
53100 STEEL DECK					
STEEL DECK	SUBMIT PLANS SHOWING SPANS, DECK SIZE, AND MATERIAL FOR EACH ROOF AND/OR DECK TYPE.	X			
DECK ATTACHMENT		X			
133419 METAL BUILDING SYSTEMS					
ERECTION DRAWINGS	SIZE, LAYOUT, AND ORIENTATION OF COLUMNS, ANCHOR BOLT DIAMETER AND LAYOUT IN BASE PLATE.	X		X	
CALCULATIONS	LIST LOADS USED IN DESIGN. LIST FINAL COLUMN REACTIONS.	X			X

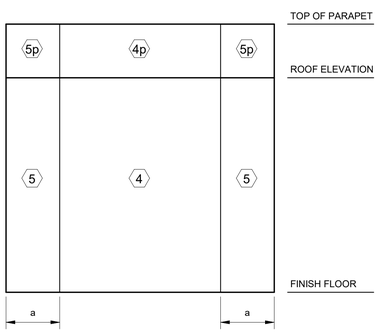

4 Wall Components and Cladding Wind Zones
3/4" = 1'-0"

a = 5' - 0"
b = 3' - 2"
c = 7' - 2"

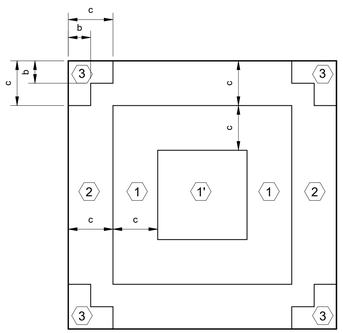

5 Flat Components and Cladding Wind Zones
3/4" = 1'-0"

a = 5' - 0"
b = 3' - 2"
c = 7' - 2"

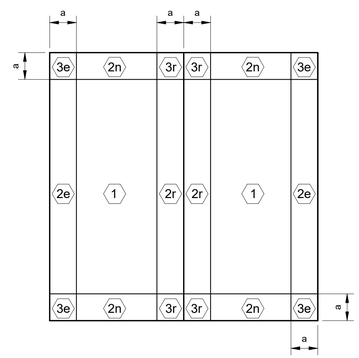

6 Gable Roof (7°<Θ≤20°) Components and Cladding Wind Zones
3/4" = 1'-0"

a = 5' - 0"
b = 3' - 2"
c = 7' - 2"

OLD MEMORIAL

13600 National Golf Dr
Tampa, FL 33626

no.	description	date
	PERMIT SET	4.24.26

S0-102

COMPONENTS AND CLADDING SHEET

sheet size 24"

Reviewed for Code Compliance
With The Florida Building Code
ECS, Florida LLC
41-5640-BLD2 7/20/2026

Electrical Review - Roger Sanders PX651 - Reviewed - 7/14/2026
Mechanical Review - Roger Sanders PX651 - Reviewed - 7/14/2026
Plumbing Review - Roger Sanders PX651 - Reviewed - 7/14/2026
Fire Review - Jay Traina - NA to Private Provider - 7/16/2026
Building Review - Roger Sanders PX651 - Reviewed - 7/14/2026

ALIGNED
CIVIL & STRUCTURAL
4527 HUNTINGTON ST NE
ST. PETERSBURG, FL 33703 | 205.913.3482
PROJECT #: 26003
THE DRAWINGS AND DESIGN INTENT ARE THE SOLE PROPERTY OF ALIGNED ENGINEERING AND DESIGN WHICH MAY NOT BE REPRODUCED WITHOUT WRITTEN PERMISSION.

LAFATE WILSON
architects
1030 arlington ave n, st petersburg fl 33705
(727) 490-9483
studio@lafatewilson.com

THE ARCHITECT'S COMMON LAW COPYRIGHT AND OTHER PROPERTY RIGHTS ARE HEREBY RESERVED IN THE IDEAS, DESIGNS, PLANS, DRAWINGS, AND SPECIFICATIONS SHALL NOT BE REPRODUCED OR CONVEYED IN ANY MANNER NOR ASSIGNED TO ANY THIRD PARTY

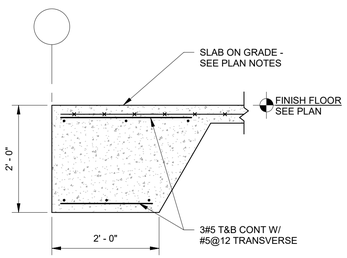

1 Section
N.T.S.

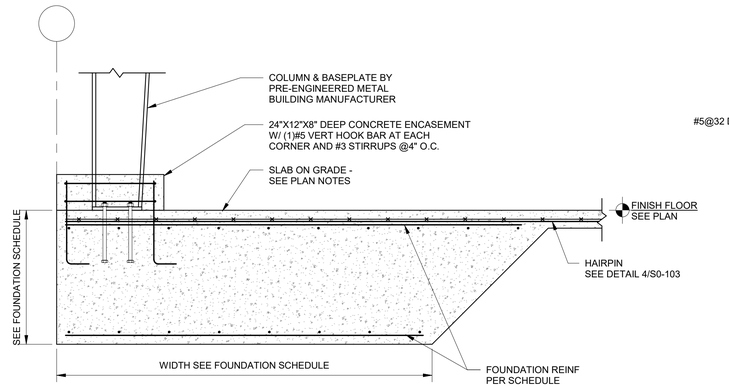

2 Section
N.T.S.

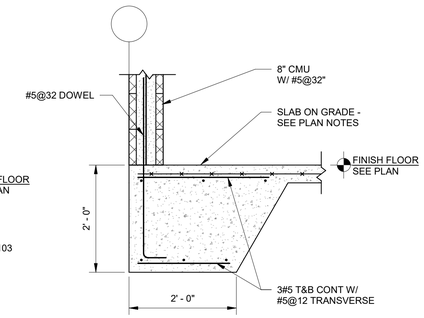

3 Section
3/4" = 1'-0"

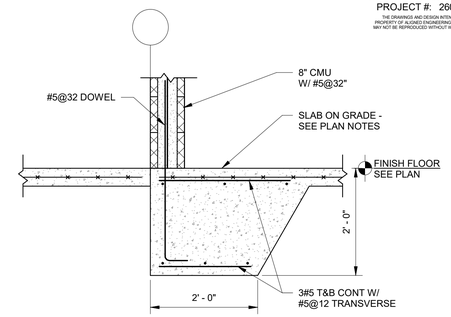

4 Section
3/4" = 1'-0"

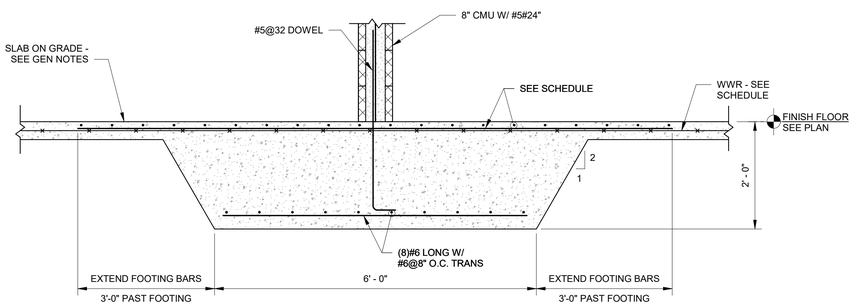

5 Section
3/4" = 1'-0"

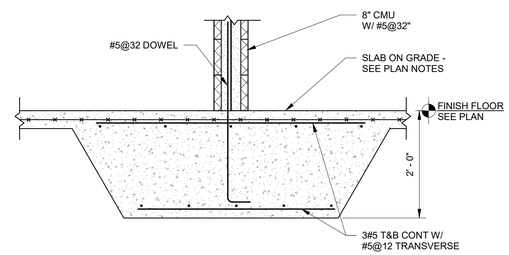

6 Section
3/4" = 1'-0"

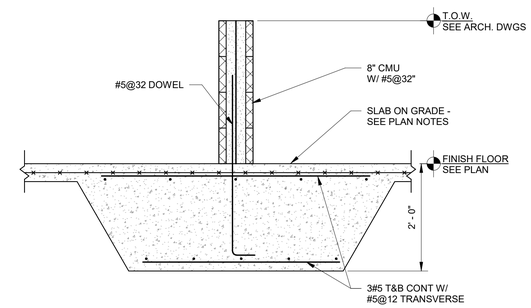

7 Section
3/4" = 1'-0"

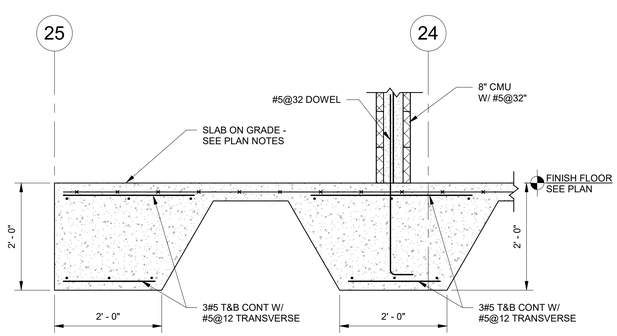

8 Section
3/4" = 1'-0"

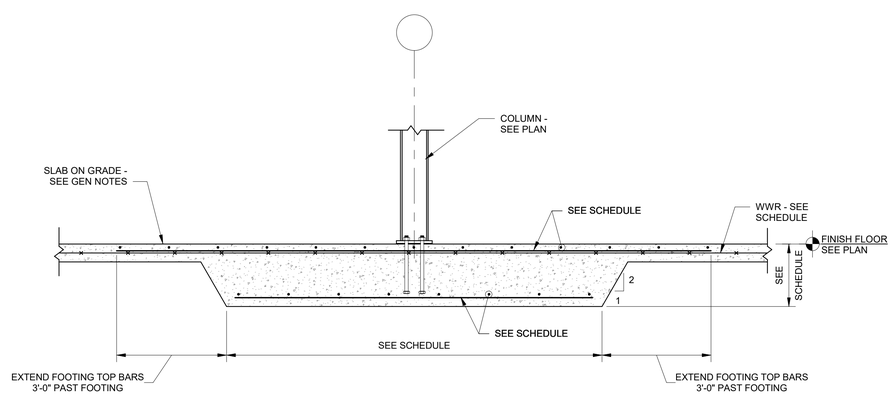

9 Section
N.T.S.

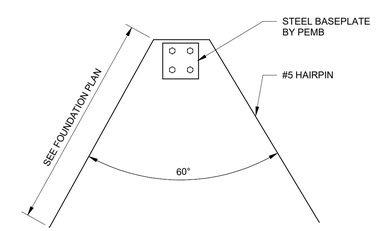

10 Hair Pin
N.T.S.

OLD MEMORIAL

13600 National Golf Dr
Tampa, FL 33626

no.	description	date
	PERMIT SET	4.24.26

S0-103
TYPICAL DETAILS

sheet size 24"

Reviewed for Code Compliance
With The Florida Building Code
ECS, Florida LLC
41-5640-BLD2 7/20/2026

Electrical Review - Roger Sanders PX651 - Reviewed - 7/14/2026
Mechanical Review - Roger Sanders PX651 - Reviewed - 7/14/2026
Plumbing Review - Roger Sanders PX651 - Reviewed - 7/14/2026
Fire Review - Jay Traina - NA to Private Provider - 7/16/2026
Building Review - Roger Sanders PX651 - Reviewed - 7/14/2026

ALIGNED
CIVIL & STRUCTURAL
4527 HUNTINGTON ST NE
ST. PETERSBURG, FL 33703 | 305.913.3482
PROJECT #: 26003
THE DRAWINGS AND DESIGN INTENT ARE THE SOLE PROPERTY OF ALIGNED ENGINEERING AND DESIGN WHICH MAY NOT BE REPRODUCED WITHOUT WRITTEN PERMISSION.

LAFATE WILSON
architects
1030 arlington ave n, st petersburg fl 33705
(727) 490-9483
studio@lafatewilson.com

THE ARCHITECT'S COMMON LAW COPYRIGHT AND OTHER PROPERTY RIGHTS ARE HEREBY RESERVED IN THE IDEAS, DESIGNS, PLANS, DRAWINGS, AND SPECIFICATIONS SHALL NOT BE REPRODUCED OR CONVEYED IN ANY MANNER NOR ASSIGNED TO ANY THIRD PARTY

Concrete Tension Lap Splice Lengths

Bar Size	f'_c = 3000 PSI				f'_c = 4000 PSI			
	Top Bars		Bottom Bars		Top Bars		Bottom Bars	
	A	B	A	B	A	B	A	B
#3	22"	29"	17"	23"	19"	25"	15"	20"
#4	29"	38"	22"	29"	25"	33"	19"	25"
#5	36"	47"	28"	37"	31"	41"	24"	32"
#6	43"	56"	33"	43"	37"	49"	29"	38"
#7	63"	82"	48"	63"	54"	71"	42"	55"
#8	72"	94"	55"	72"	62"	81"	48"	63"
#9	81"	106"	62"	81"	70"	91"	54"	71"
#10	91"	119"	70"	91"	79"	103"	61"	80"
#11	101"	132"	78"	102"	87"	114"	67"	88"
#14	121"	158"	93"	121"	105"	137"	81"	106"

1. TABULATED TENSION LAP SPLICE LENGTHS ARE FOR NORMAL WEIGHT CONCRETE ONLY AND HAVE NOT BEEN FACTORED FOR EXPOXY-COATED BARS.
2. ALL LENGTHS ARE IN INCHES (IN).
3. TABULATED VALUES ARE CALCULATED PER ACI 318-14, CHAPTER 25.
4. WHEN LAP SPLICING BARS OF DIFFERENT SIZES, THE LAP LENGTH IS DETERMINED BY THE LARGER BAR.
5. TOP BARS ARE HORIZONTAL REINFORCEMENT WITH MORE THAN 12" CONCRETE CAST BELOW REINFORCEMENT.
6. TABLE SHALL APPLY ONLY WHEN ACI 318 MINIMUM COVER IS PROVIDED AND THE CENTER-TO-CENTER SPACING IS ≥ 3db

1 Tension Lap Splice Lengths by Concrete Compression Strength
3/4" = 1'-0"

Concrete Compressive Strengths

Structural Element	Exposure Class	Design Strength, f'_c (PSI)
Foundations and Stem Walls	C1	3000
Slab on Grade	C1	3000
Concrete on Metal Deck	W0	3500
Columns	W0	5000
Walls	W0	5000
Beams	W0	5000
Elevated Slabs	W0	5000

1. NOTED EXPOSURE CLASSES ARE IN REFERENCE TO CHAPTER 19 OF ACI 318-14. MINIMUM AND MAXIMUM REQUIREMENTS BASED ON TABLE 19.3.2.1.
2. CONCRETE COMPRESSIVE STRENGTHS NOTED ARE MINIMUM REQUIREMENTS USED IN DESIGN.

2 Concrete Compressive Strengths
3/4" = 1'-0"

Concrete Cover Requirements

Structural Element	Reinforcement	Cover (in)
Members Not Exposed to Weather or in Contact With Ground		
Slabs	All	3/4"
Joists	All	3/4"
Walls	All	3/4"
Beams	To Stirrups	1 1/2"
Columns	To Stirrups	1 1/2"
Members Exposed to Weather or in Contact With Ground		
Slabs	#5 or Smaller	1 1/2"
	#6 or Larger	2"
Columns/Pedestals	#5 or Smaller	1 1/2"
	#6 or Larger	2"
Walls	#5 or Smaller	1 1/2"
	#6 or Larger	2"
Slab on Grade	WWR	2" From Top
Foundations and Grade Beams	Bottom/Side	3"
	Top	2"

3 Concrete Cover Requirements
3/4" = 1'-0"

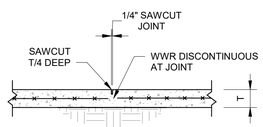

CONTROL JOINT

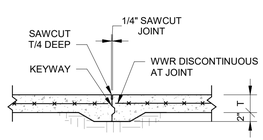

CONSTRUCTION JOINT

CONTROL/CONSTRUCTION JOINT NOTES:
1. CUT JOINTS AS SOON AS SLAB IS ABLE TO SUPPORT WEIGHT OF WORKERS AND EQUIPMENT. APPROXIMATELY 4 TO 8 HOURS AFTER CONCRETE PLACEMENT.
2. CLEAN JOINT PRIOR TO FILLING WITH SEMI-RIGID EPOXY
3. CUT JOINTS AROUND COLUMNS AS SHOWN IN COLUMN ISOLATION DETAIL.
4. FOR LAYOUT OF CONTROL JOINTS, SEE FOUNDATION AND FIRST FLOOR PLAN. IF NO CONTROL JOINTS ARE SHOWN ON PLAN, CONTACT ENGINEER OF RECORD.
5. SEE PLANS AND DETAILS FOR SLAB THICKNESS.
6. CONTRACTOR TO COORDINATE TILE JOINT LOCATIONS WITH CONTROL JOINTS.
7. SEE TYPICAL DETAILS FOR CONCRETE STRENGTH AND WELDED WIRE REINFORCEMENT REQUIREMENTS.

4 Slab on Grade Control Joints
3/4" = 1'-0"

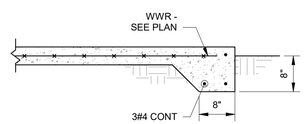

SLAB EDGE

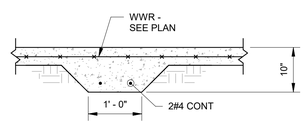

THICKENED SLAB

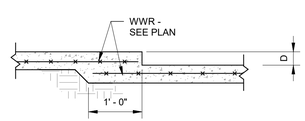

SLAB DEPRESSION D ≤ 3"

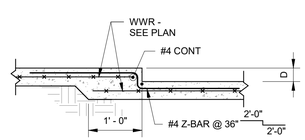

SLAB DEPRESSION 3' < D ≤ 12"

5 Slab on Grade Details
3/4" = 1'-0"

OLD MEMORIAL

13600 National Golf Dr
Tampa, FL 33626

no.	description	date
	PERMIT SET	4.24.26

S0-104

TYPICAL DETAILS

sheet size 24"

Reviewed for Code Compliance
With The Florida Building Code
ECS, Florida LLC
41-5640-BLD2 7/20/2026

Electrical Review - Roger Sanders PX651 - Reviewed - 7/14/2026
Mechanical Review - Roger Sanders PX651 - Reviewed - 7/14/2026
Plumbing Review - Roger Sanders PX651 - Reviewed - 7/14/2026
Fire Review - Jay Traina - NA to Private Provider - 7/16/2026
Building Review - Roger Sanders PX651 - Reviewed - 7/14/2026

ALIGNED
CIVIL & STRUCTURAL
4527 HUNTINGTON ST NE
ST. PETERSBURG, FL 33703 | 205.913.3482
PROJECT #: 26003
THE DRAWINGS AND DESIGN INTENT ARE THE SOLE PROPERTY OF ALIGNED ENGINEERING AND DESIGN WHICH MAY NOT BE REPRODUCED WITHOUT WRITTEN PERMISSION.

LAFATE WILSON
architects
1030 arlington ave n, st petersburg fl 33705
(727) 490-9483
studio@lafatewilson.com

THE ARCHITECT'S COMMON LAW COPYRIGHT AND OTHER PROPERTY RIGHTS ARE HEREBY RESERVED IN THE IDEAS, DESIGNS, PLANS, DRAWINGS, AND SPECIFICATIONS SHALL NOT BE REPRODUCED OR CONVEYED IN ANY MANNER NOR ASSIGNED TO ANY THIRD PARTY

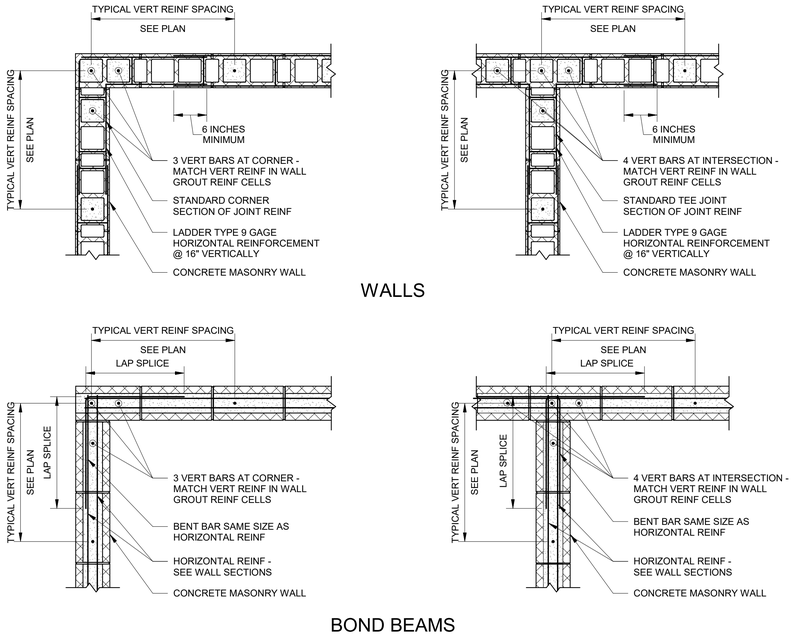

1 Plan View of Joint Reinforcement in Masonry Wall Joints
3/4" = 1'-0"

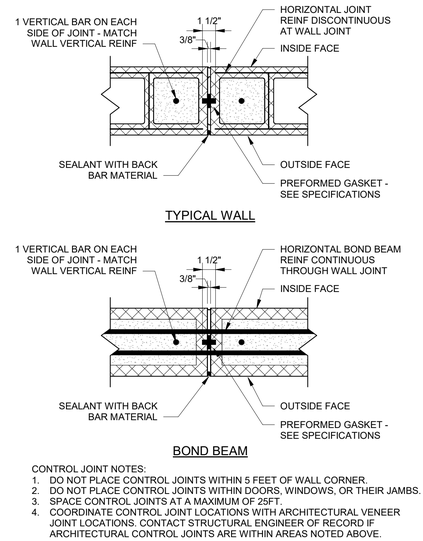

CONTROL JOINT NOTES:
1. DO NOT PLACE CONTROL JOINTS WITHIN 5 FEET OF WALL CORNER.
2. DO NOT PLACE CONTROL JOINTS WITHIN DOORS, WINDOWS, OR THEIR JAMBS.
3. SPACE CONTROL JOINTS AT A MAXIMUM OF 25FT.
4. COORDINATE CONTROL JOINT LOCATIONS WITH ARCHITECTURAL VENEER JOINT LOCATIONS. CONTACT STRUCTURAL ENGINEER OF RECORD IF ARCHITECTURAL CONTROL JOINTS ARE WITHIN AREAS NOTED ABOVE.

2 Masonry Wall Control Joint
1 1/2" = 1'-0"

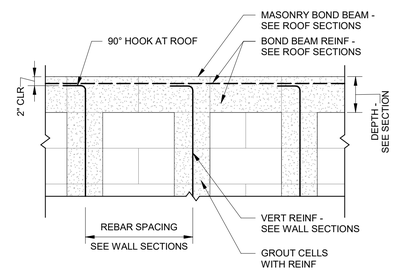

3 Top of Wall Reinforcement Detail
3/4" = 1'-0"

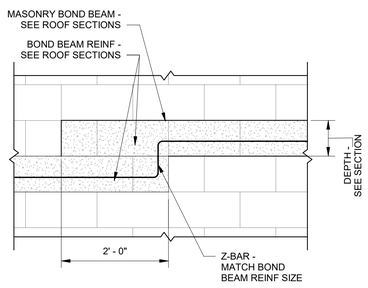

4 Stepped Bond Beam Detail
3/4" = 1'-0"

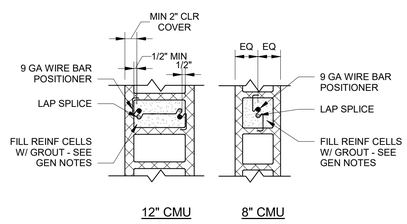

5 Vertical Wall Reinforcement Location Details
1" = 1'-0"

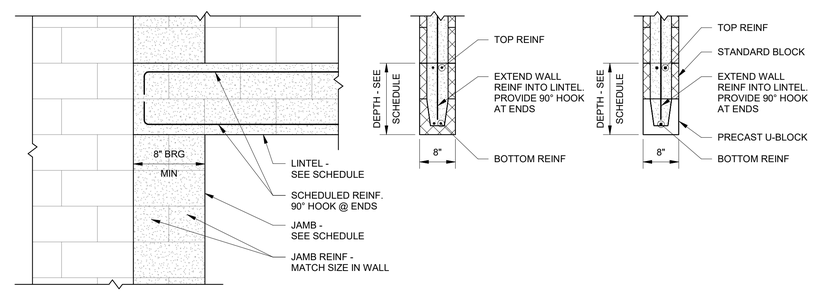

CMU Lintel Schedule						Precast Lintel
Opening Width	Wall Thickness	Lintel Depth	Bottom Reinf	Top Reinf	Jamb	
3'-0"-4'-0"	8"	8"	(1)#5	---	1 Cell	8F8-1B
4'-0"-6'-1"	8"	16"	(1)#5	(1)#5	2 Cells	8F16-1B/1T
6'-1"-8'-0"	8"	20"	(1)#5	(2)#5	2 Cells	8F20-1B/2T
8'-1"-12'-0"	8"	24"	(2)#5	(2)#5	2 Cells	8F24-2B/2T

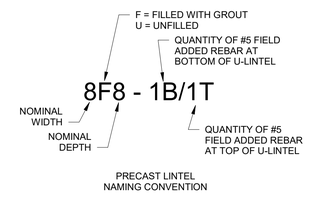

6 Masonry Lintel Detail
N.T.S.

OLD MEMORIAL
13600 National Golf Dr
Tampa, FL 33626

no.	description	date
	PERMIT SET	4.24.26

S0-105
TYPICAL DETAILS

sheet size 24"

Reviewed for Code Compliance
With The Florida Building Code
ECS, Florida LLC
41-5640-BLD2 7/20/2026

Electrical Review - Roger Sanders PX651 - Reviewed - 7/14/2026
Mechanical Review - Roger Sanders PX651 - Reviewed - 7/14/2026
Plumbing Review - Roger Sanders PX651 - Reviewed - 7/14/2026
Fire Review - Jay Traina - NA to Private Provider - 7/16/2026
Building Review - Roger Sanders PX651 - Reviewed - 7/14/2026

ALIGNED
CIVIL & STRUCTURAL
4527 HUNTINGTON ST NE
ST. PETERSBURG, FL 33703 | 205.913.3482
PROJECT #: 26003
THE DRAWINGS AND DESIGN INTENT ARE THE SOLE PROPERTY OF ALIGNED ENGINEERING AND DESIGN WHICH MAY NOT BE REPRODUCED WITHOUT WRITTEN PERMISSION.

LAFATE WILSON
a r c h i t e c t s
1030 arlington ave n, st petersburg fl 33705
(727) 490-9483
studio@lafatewilson.com

THE ARCHITECT'S COMMON LAW COPYRIGHT AND OTHER PROPERTY RIGHTS ARE HEREBY RESERVED IN THE IDEAS, DESIGNS, PLANS, DRAWINGS, AND SPECIFICATIONS SHALL NOT BE REPRODUCED OR CONVEYED IN ANY MANNER NOR ASSIGNED TO ANY THIRD PARTY

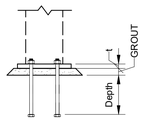

Base Plate Schedule											
Mark	Base Plate					Anchor Rods			Weld		Grout
	N	B	E1	E2	t	#	Dia	Depth	W1	W2	
BP-1	8"	8"	2 1/2"	2 1/2"	3/4"	4	3/4"	12"	1/4"	1/4"	1 1/2"

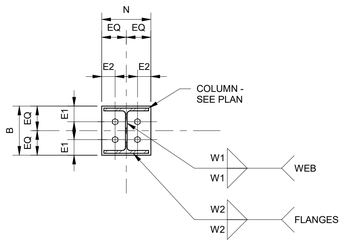

1 Base Plate Schedule and Details
3/4" = 1'-0"

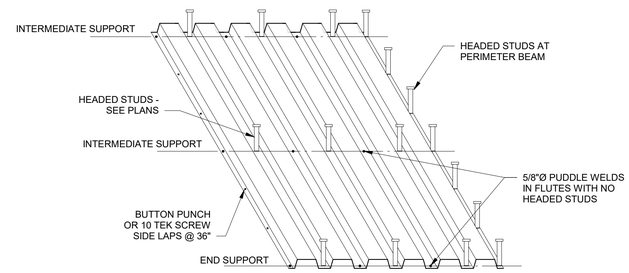

2 Composite Deck Attachment Detail
1" = 1'-0"

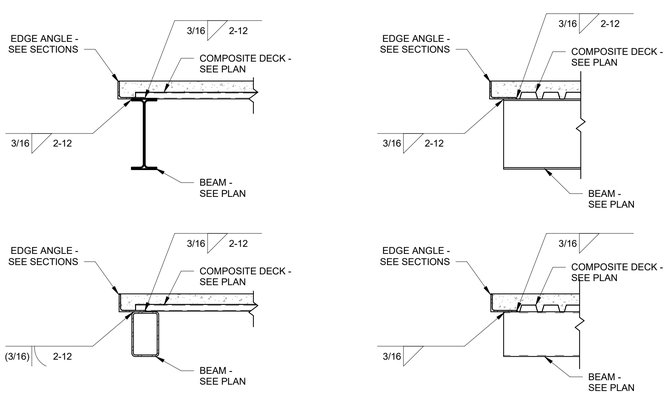

3 Composite Deck Edge Angle Attachment
3/4" = 1'-0"

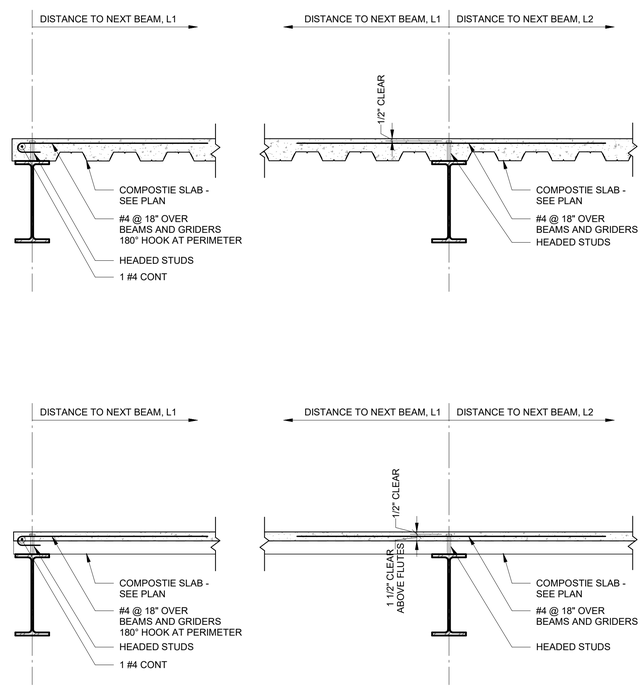

4 Composite Slab Reinforcement At Beams and Girders Detail
3/4" = 1'-0"

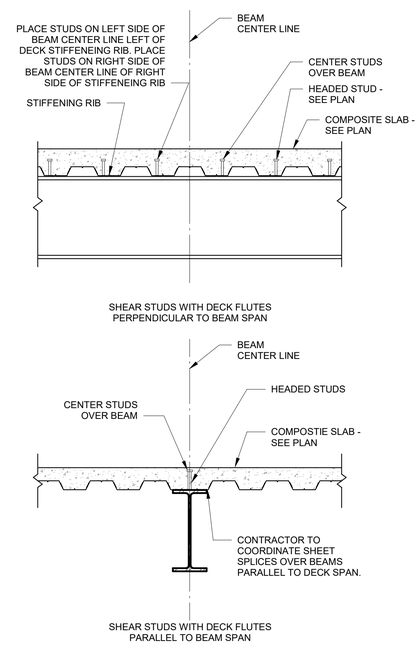

5 Placement of Headed Shear Studs in Deck Flutes Detail
3/4" = 1'-0"

OLD MEMORIAL
13600 National Golf Dr
Tampa, FL 33626

no.	description	date
	PERMIT SET	4.24.26

S0-106
TYPICAL DETAILS

sheet size 24"

Reviewed for Code Compliance
With The Florida Building Code
ECS, Florida LLC
41-5640-BLD2 7/20/2026

Electrical Review - Roger Sanders PX651 - Reviewed - 7/14/2026
~~Mechanical Review - Roger Sanders PX651 - Reviewed - 7/14/2026~~
Plumbing Review - Roger Sanders PX651 - Reviewed - 7/14/2026
Fire Review - Jay Traina - NA to Private Provider - 7/16/2026
Building Review - Roger Sanders PX651 - Reviewed - 7/14/2026

ALIGNED
CIVIL & STRUCTURAL
4527 HUNTINGTON ST NE
ST. PETERSBURG, FL 33703 | 205.913.3482
PROJECT #: 26003
THE DRAWINGS AND DESIGN INTENT ARE THE SOLE PROPERTY OF ALIGNED ENGINEERING AND DESIGN WHICH MAY NOT BE REPRODUCED WITHOUT WRITTEN PERMISSION.

LAFATE WILSON
architects
1030 arlington ave n, st petersburg fl 33705
(727) 490-9483
studio@lafatewilson.com

THE ARCHITECT'S COMMON LAW COPYRIGHT AND OTHER PROPERTY RIGHTS ARE HEREBY RESERVED IN THE IDEAS, DESIGNS, PLANS, DRAWINGS, AND SPECIFICATIONS SHALL NOT BE REPRODUCED OR CONVEYED IN ANY MANNER NOR ASSIGNED TO ANY THIRD PARTY

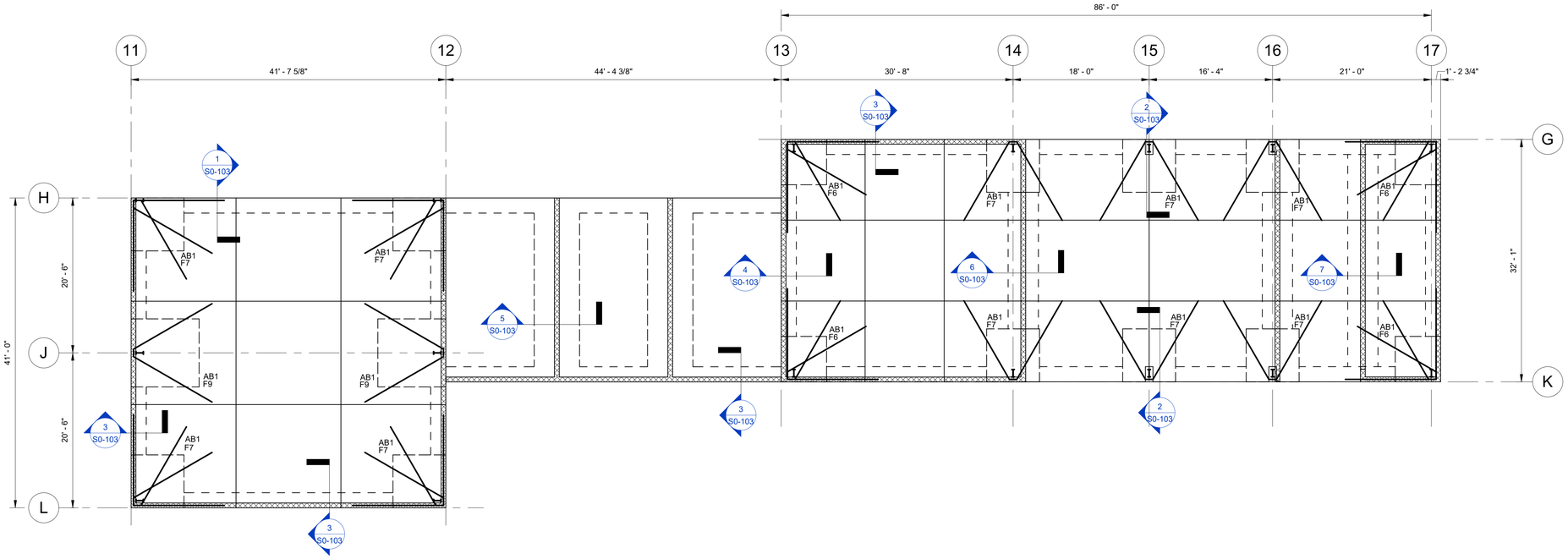

1 Building 2 - Foundation and First Floor Plan
1/8" = 1'-0"

1. FINISH FLOOR (SLAB ON GRADE) ELEVATION 0'-0", UNLESS NOTED ON PLAN.
2. FOUNDATIONS ARE POURED MONOLITHICALLY WITH SLAB ON GRADE.
3. SLAB ON GRADE: 4" THICK CONCRETE, REINFORCED WITH 6X6 W2.9/2.9 WWR. SEE GENERAL NOTES AND TYPICAL DETAILS.

Structural Foundation Schedule - BLDG 2

Mark	Length	Width	Depth	Bottom Reinforcement	Top Reinforcement	Notes
F6	6' - 0"	6' - 0"	2' - 6"	(7)#7 EW	(7)#7 EW	
F7	7' - 0"	7' - 0"	2' - 6"	(8)#7 EW	(8)#7 EW	
F9	9' - 0"	9' - 0"	3' - 0"	(10)#7 EW	(10)#7 EW	

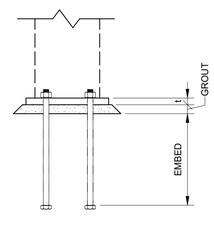

Anchor Bolt Schedule

Mark	Anchor Rods		
	#	Dia.	Embed
AB1	4	3/4"	1' - 4"

OLD MEMORIAL
13600 National Golf Dr
Tampa, FL 33626

no.	description	date
	PERMIT SET	4.24.26

S2-101
FOUNDATION PLAN

sheet size 24"

Reviewed for Code Compliance
With The Florida Building Code
ECS, Florida LLC
41-5640-BLD2 7/20/2026

Electrical Review - Roger Sanders PX651 - Reviewed - 7/14/2026
Mechanical Review - Roger Sanders PX651 - Reviewed - 7/14/2026
Plumbing Review - Roger Sanders PX651 - Reviewed - 7/14/2026
Fire Review - Jay Traina - NA to Private Provider - 7/16/2026
~~Building Review - Roger Sanders PX651 - Reviewed - 7/14/2026~~

ELECTRICAL SYMBOL LEGEND

WIRING AND POWER

NOTE:
SYMBOLS SHOWN ARE FOR REFERENCE PURPOSES ONLY. ALL OF THESE SYMBOLS MAY NOT BE USED FOR THIS PROJECT.

- WALL OUTLET BOX AND SINGLE RECEPTACLE
- WALL OUTLET BOX AND DUPLEX RECEPTACLE
- TWO GANG WALL OUTLET BOX AND (2) DUPLEX RECEPTACLES
- WALL OUTLET BOX AND DUPLEX RECEPTACLE MOUNTED ABOVE COUNTER
- WALL OUTLET BOX AND DUPLEX RECEPTACLE WITH TOP HALF SWITCHED
- WALL OUTLET BOX AND DUPLEX RECEPTACLE CONNECTED TO EMERGENCY SYSTEM
- CEILING OUTLET BOX AND SINGLE RECEPTACLE
- CEILING OUTLET BOX AND DUPLEX RECEPTACLE
- WALL OUTLET BOX AND GFCI DUPLEX RECEPTACLE
- WALL OUTLET BOX AND GFCI DUPLEX RECEPTACLE MOUNTED ABOVE COUNTER
- S — WALL OUTLET BOX AND DUPLEX SAFETY RECEPTACLE
- T — WALL OUTLET BOX AND DUPLEX TWIST-LOCK RECEPTACLE
- WP — WALL OUTLET BOX AND GFCI DUPLEX RECEPTACLE WITH WEATHERPROOF COVER
- WALL OULTET BOX AND SPECIAL PURPOSE OUTLET AS NOTED ON PLANS
- FLUSH FLOOR OUTLET BOX WITH DUPLEX RECEPTACLE
- FLUSH FLOOR OUTLET BOX WITH (2) DUPLEX RECEPTACLES
- FLUSH FLOOR OUTLET BOX WITH DUPLEX RECEPTACLE AND TELECOMMUNICATIONS OUTLET
- FLUSH WALL JUNCTION BOX AND BLANK PLATE
- JUNCTION BOX AND BLANK PLATE ABOVE CEILING
- SURFACE MOUNTED JUNCTION BOX AND BLANK PLATE
- WP — SURFACE MOUNTED WEATHERPROOF JUNCTION BOX AND COVER
- PB — FLUSH GRADE FIBER COMPOSITE PULL BOX AS NOTED
- M — MOTOR CONNECTION AS NOTED
- FLUSH SHUNT-TRIP BUTTON, MOUNTED 80" TO TOP
- C — CONTROL AND/OR POWER EQUIPMENT CONNECTION
- TIME CLOCK
- PC — PHOTO CELL
- DISCONNECT SWITCH, SIZE AS NOTED
- 120/208V BRANCH CIRCUIT PANELBOARD, SURFACE MOUNTED
- 120/208V BRANCH CIRCUIT PANELBOARD, FLUSH MOUNTED
- 277/480V BRANCH CIRCUIT PANELBOARD
- T — TRANSFORMER
- AUTOMATIC TRANSFER SWITCH
- A-3 — BRANCH CIRCUIT HOMERUN WITH PANEL NAME AND CIRCUIT NUMBER, QUANTITY OF ARROWHEADS DENOTES QUANTITY OF BRANCH CIRCUITS
- BRANCH CIRCUIT WIRING, PROVIDE QUANTITY OF CONDUCTORS REQUIRED FOR CIRCUITING AND SWITCHING INDICATED ON PLANS
- POWER LEG ONLY (NO SWITCH LEG BETWEEN ROOMS)
- CONDUIT CAPPED OFF
- CONDUIT CONTINUED
- CONDUIT RUN UP
- CONDUIT RUN DOWN
- GROUND OR GROUND ROD AS NOTED

ELECTRICAL SYMBOL LEGEND

LIGHTING AND SWITCHING

- CEILING MOUNTED LIGHT FIXTURE, REFER TO LIGHT FIXTURE SCHEDULE
- CEILING MOUNTED RECESSED DOWNLIGHT FIXTURE, REFER TO LIGHT FIXTURE SCHEDULE
- CEILING MOUNTED RECESSED WALLWASH FIXTURE, REFER TO LIGHT FIXTURE SCHEDULE
- CEILING MOUNTED "CLOSE TO CEILING" FIXTURE, REFER TO LIGHT FIXTURE SCHEDULE
- PENDANT MOUNTED LIGHT FIXTURE, REFER TO LIGHT FIXTURE SCHEDULE
- TRACK LIGHT FIXTURE WITH HEADS AS REQUIRED, REFER TO LIGHT FIXTURE SCHEDULE
- WALL MOUNTED LIGHT FIXTURE, REFER TO LIGHT FIXTURE SCHEDULE
- CEILING MOUNTED LIGHT FIXTURE WITH EMERGENCY BACKUP
- CEILING MOUNTED RECESSED DOWNLIGHT FIXTURE WITH EMERGENCY BACKUP
- WALL MOUNTED LIGHT FIXTURE WITH EMERGENCY BACKUP
- WALL MOUNTED EMERGENCY BATTERY LIGHT FIXTURE, REFER TO LIGHT FIXTURE SCHEDULE
- CEILING MOUNTED EMERGENCY BATTERY LIGHT FIXTURE, REFER TO LIGHT FIXTURE SCHEDULE
- CEILING MOUNTED EXIT SIGN WITH EMERGENCY BACKUP, REFER TO LIGHT FIXTURE SCHEDULE
- WALL MOUNTED EXIT SIGN WITH EMERGENCY BACKUP, REFER TO LIGHT FIXTURE SCHEDULE
- COMBINATION EXIT SIGN AND EMERGENCY LIGHT FIXTURE WITH BATTERY BACKUP
- S_a — WALL OUTLET BOX AND SINGLE POLE SWITCH ('a' INDICATES SWITCH LEG)
- S_3 — WALL OUTLET BOX AND THREE-WAY SWITCH
- S_F — WALL OUTLET BOX AND FAN CONTROL SWITCH
- S_D — WALL OUTLET BOX AND DIMMER SWITCH AS REQUIRED FOR LOAD SERVED
- S_{D3} — WALL OUTLET BOX AND THREE-WAY DIMMER SWITCH
- S_M — WALL OUTLET BOX WITH SINGLE POLE MANUAL MOTOR STARTER SWITCH
- S_O — WALL OUTLET BOX AND DUAL TECHNOLOGY OCCUPANCY SENSOR
- OS — CEILING OUTLET BOX AND DUAL TECHNOLOGY OCCUPANCY SENSOR
- DL — CEILING OUTLET BOX AND DAYLIGHT HARVESTING SENSOR

FIRE ALARM SYSTEM LEGEND

- F — MANUAL PULL STATION
- cd — WALL MOUNTED HORN WITH STROBE (cd=CANDELA RATING)
- WP — WALL MOUNTED HORN WITH STROBE IN WEATHERPROOF ENCLOSURE
- CEILING MOUNTED HORN WITH STROBE
- M — WALL MOUNTED MINI HORN
- M — WALL MOUNTED MINI HORN WITH STROBE
- WALL MOUNTED VOICE EVACUATION SPEAKER WITH STROBE
- CEILING MOUNTED VOICE EVACUATION SPEAKER WITH STROBE
- WALL MOUNTED STROBE
- SMOKE DETECTOR
- CO — SMOKE AND CARBON MONOXIDE DETECTOR
- DUCT MOUNTED SMOKE DETECTOR
- HEAT DETECTOR
- REMOTE DUCT DETECTOR INDICATOR LIGHT AND TEST SWITCH (NUMBER INDICATES QUANTITY)
- R — FAN SHUT-DOWN RELAY
- D — ELECTROMAGNETIC DOOR RELEASE DEVICE
- SMOKE DAMPER (PROVIDE BY MECHANICAL, CONNECTED BY ELECTRICAL)
- P — FIREMAN'S PHONE JACK
- TS — SPRINKLER SYSTEM SUPERVISORY SWITCH CONNECTION
- FS — SPRINKLER SYSTEM FLOW SWITCH CONNECTION
- CM — CONTROL MODULE
- MM — MONITOR MODULE
- LB — LOCK BOX
- FACP — FIRE ALARM CONTROL PANEL
- FATC — FIRE ALARM TERMINAL CABINET
- FAAP — FIRE ALARM ANNUNCIATOR PANEL
- DACT — DIGITAL ALARM COMMUNICATOR TRANSMITTER

TELECOMMUNICATION SYSTEM LEGEND

- COMBINATION TELECOMMUNICATIONS/DATA WALL OUTLET BOX AND BLANK PLATE WITH MIN. 3/4"C. TO ACCESSIBLE CEILING SPACE. COORDINATE OUTLET REQUIREMENTS WITH OWNER.
- W — TELECOMMUNICATIONS WALL OUTLET BOX AND BLANK PLATE FOR WALL MOUNTED TELEPHONE WITH MIN. 3/4"C. TO ACCESSIBLE CEILING SPACE. COORDINATE OUTLET REQUIREMENTS WITH OWNER.
- DATA WALL OUTLET BOX AND BLANK PLATE WITH MIN. 3/4"C. TO ACCESSIBLE CEILING SPACE. COORDINATE OUTLET REQUIREMENTS WITH OWNER.
- FLUSH FLOOR OUTLET BOX WITH POWER DEVICE AND TELECOMMUNICATIONS OUTLET WITH MIN. 3/4"C. TO ACCESSIBLE CEILING SPACE.
- WAP — CEILING OUTLET BOX AND BLANK PLATE WITH MIN. 3/4"C. TO TTB FOR WIRELESS ACCESS POINT. COORDINATE OUTLET REQUIREMENTS WITH OWNER.
- TV — COMBINATION TELECOMMUNICATIONS/TELVISION WALL OUTLET BOX AND BLANK PLATE. COORDINATE OUTLET AND CABLING REQUIREMENTS WITH OWNER.
- 3/4" PLYWOOD TELEPHONE TERMINAL BOARD, SIZE AS SHOWN ON PLANS.
- TTC — TELEPHONE TERMINAL CABINET, SIZE AS NOTED ON PLAN.

GENERAL NOTES:

1. ALL WORK SHALL BE DONE IN ACCORDANCE WITH THE LATEST ADOPTED EDITION OF THE NATIONAL ELECTRICAL CODE (NFPA 70), AND THE LATEST ADOPTED EDITION OF THE FLORIDA BUILDING CODE.
2. CONTRACTOR SHALL FIELD VERIFY ALL CONDITIONS AND COORDINATE WITH ALL EQUIPMENT MANUFACTURER/INSTALLERS PRIOR TO BIDDING.
3. ALL ELECTRICAL MATERIALS, DEVICES, APPLIANCES, AND EQUIPMENT SHALL BE LABEL LISTED BY AN APPROVED THIRD-PARTY TESTING AGENCY.

<u>BUILDING:</u>

4. INSTALLATION HEIGHT OF EQUIPMENT (TO CENTERLINE) ABOVE FINISHED FLOOR UNLESS NOTED OTHERWISE SHALL BE:

   RECEPTACLE = 18"
   CLOCK = 7'-6"
   SWITCH = 44"
   MODULAR JACK FOR WALL MOUNTED TELEPHONE = 48"
   MODULAR TELEPHONE JACK = 18"
   TELEVISION OUTLET = 84"
   COMPUTER OUTLET = 18"
   CALL SWITCH = 44"
   REMOTE TEST STATION FOR DUCT DETECTOR = 52"
   C = ABOVE COUNTER BACKSPLASH, COORDINATE WITH ARCHITECTURAL ELEVATIONS AND MILLWORK.
5. ALL CONDUIT AND WIRING SHALL BE CONCEALED IN WALLS OR ABOVE CEILINGS UNLESS NOTED OTHERWISE OR APPROVED BY THE ARCHITECT/ENGINEER. ALL DEVICE OUTLET BOXES SHALL BE RECESSED UNLESS NOTED OTHERWISE OR APPROVED BY THE ARCHITECT/ENGINEER. WHERE APPROVED OR NOTED SURFACE METAL RACEWAY AND DEVICE BOXES SHALL BE USED IN LIEU OF CONDUIT AND CONCEALED BOXES AT NO EXTRA COST TO THE OWNER.
6. ALL CONDUIT ROUTING SHOWN IS APPROXIMATE ONLY. CONTRACTOR SHALL FIELD VERIFY FINAL ROUTE WITH ALL OTHER TRADES AND CONDITIONS IN FIELD PRIOR TO ROUGH-IN.
7. CONDUIT RUNS SHOWN ARE SCHEMATIC AND DO NOT INDICATE THE NECESSARY FITTINGS AND JUNCTION BOXES THAT ARE INCLUDED IN THE SCOPE OF THE WORK.
8. CONTRACTOR SHALL PERMANENTLY IDENTIFY ALL WIRING WITH THE SOURCE AND CIRCUIT AT ALL ELECTRICAL EQUIPMENT, PULL AND JUNCTION BOXES AND ELECTRICAL TERMINATIONS PROVIDED OR ASSOCIATED WITH THIS CONSTRUCTION.
9. COORDINATE EXACT LOCATION OF LIGHTING FIXTURES IN MECH. ROOMS/SPACES WITH DUCTWORK INSTALLER PRIOR TO ROUGH-IN. LOCATE BELOW DUCTWORK(8'-0" AFF MINIMUM) CENTERED IN ROOM AS MUCH AS POSSIBLE.
10. COORDINATE EXACT INSTALLATION REQUIREMENTS OF OUTLETS IN MILLWORK WITH ARCHITECTURAL DRAWINGS, APPROVED SHOP DRAWINGS AND MILLWORK INSTALLER PRIOR TO ROUGH-IN.
11. VERIFY EXACT LOCATION OF ALL MECHANICAL EQUIPMENT WITH MECHANICAL INSTALLER PRIOR TO ROUGH-IN.
12. REFER TO ARCHITECTURAL REFLECTED CEILING PLANS FOR EXACT LOCATIONS OF ALL LIGHT FIXTURES
13. PROVIDE NYLON PULLSTRINGS IN <u>ALL</u> EMPTY CONDUITS.
14. COORDINATE THE EXACT LOCATION OF ALL ELECTRICAL EQUIPMENT LOCATED IN ELEVATOR MACHINE ROOMS, SHAFTS AND PITS. LOCATE EQUIPMENT AS REQUIRED TO MEET APPLICABLE CODES.PROVIDE AUTOMATIC DISCONNECTION OF THE ELEVATOR MAIN POWER SUPPLY (PER ANSI A17.1, RULE 102.2 1987 ED.) PRIOR TO ACTIVATION OF AUTOMATIC SPRINKLER LOCATED WITHIN THE ELEVATOR MACHINE ROOM, PIT OR SHAFT. COORDINATE WITH FIRE PROTECTION AND FIRE ALARM INSTALLER.
15. COORDINATE THE REQUIRED SIZE OF ALL CIRCUIT BREAKERS FEEDING EQUIPMENT, (I.E. MOTORS, HVAC, KITCHEN EQUIPMENT, SPECIAL PURPOSE OUTLETS, ELEVATORS, OWNER FURNISHED EQUIPMENT ETC.) WITH APPROVED EQUIPMENT SHOP DRAWINGS AND OWNER REPRESENTATIVES PRIOR TO ORDERING PANELBOARDS. BREAKERS SHALL BE SIZED PER THE NEC, THE EQUIPMENT NAME PLATE AND MANUFACTURERS RECOMMENDATIONS.
16. ALL DIMMED CIRCUITS SHALL BE PROVIDED WITH DEDICATED NEUTRALS FOR EACH DIMMER AND PHASE CONDUCTOR THROUGHOUT THE ENTIRE CIRCUIT.
17. THE POWER COMPANY SHALL BE CONTACTED WITHIN 10 DAYS OF THE AWARD OF THE CONTRACT BY THE CONTRACTOR TO VERIFY THE ACTUAL AVAILABLE SHORT CIRCUIT FAULT CURRENT (AIC) AT THE TRANSFORMER SECONDARY BUSHINGS. THE CONTRACTOR SHALL PROVIDE ELECTRICAL DISTRIBUTION AND UTILIZATION EQUIPMENT AND PANELBOARDS WHICH HAVE AIC/WITHSTAND RATINGS GREATER THAN THE AVAILABLE AIC AT EACH POINT IN THE ELECTRICAL SYSTEM.
18. CONTRACTOR SHALL INCLUDE IN HIS BID THE TRANSPORT AND DISPOSAL OR RECYCLING OF ALL WASTE MATERIALS GENERATED BY THIS PROJECT IN ACCORDANCE WITH ALL RULES, REGULATIONS AND GUIDELINES APPLICABLE.
19. PANEL SCHEDULES INDICATE CIRCUIT DESIGNATIONS ONLY. CONTRACTOR TO PROVIDE MATERIALS AS REQUIRED WHEN NEUTRALS ARE SHARED TO COMPLY WITH NEC REQUIREMENTS. ALL SINGLE PHASE MULTIWIRE BRANCH CIRCUITS SHALL BE FED VIA A TWO POLE BREAKER OR TWO SINGLE POLE BREAKERS WITH AN IDENTIFIED HANDLE TIE. ALL THREE PHASE MULTIWIRE BRANCH CIRCUITS SHALL BE FED VIA A THREE POLE BREAKER OR THREE SINGLE POLE BREAKERS WITH AN IDENTIFIED HANDLE TIE (PER NEC 210.4B).
20. PER NEC 110.22; PROVIDE PERMANENT LABELING FOR ALL SERIES RATED PANEL ENCLOSURES TO READ AS FOLLOWS: CAUTION - SERIES COMBINATION SYSTEM RATED ______ AMPERES. IDENTIFIED REPLACEMENT COMPONENTS REQUIRED.

<u>GROUNDING:</u>

21. ALL METAL RACEWAYS, INCLUDING CONDUIT, WIRE TROUGHS, WIREMOLD, ETC., SHALL BE GROUNDED. ALL CONNECTIONS IN METAL RACEWAYS SHALL BE COMPLETED IN SUCH A MANNER AS TO MAINTAIN A CONTINUOUS PATH TO GROUND THROUGHOUT THE ENTIRE LENGTH OF THE RACEWAY.

<u>WIRING:</u>

22. UNLESS NOTED OTHERWISE ON THE DRAWINGS OR ON THE EQUIPMENT WIRING SCHEDULE, EACH BRANCH CIRCUIT HOME RUN SHALL BE THREE (3) #12 AWG THHN/THWN (1 HOT, 1 NEUTRAL & 1 EQUIPMENT GROUND) IN 3/4" EMT CONDUIT. PROTECT EACH CIRCUIT WITH A 20 AMPERE, 1-POLE OVERCURRENT DEVICE UNLESS NOTED OTHERWISE. COMBINED NEUTRALS ARE NOT PERMITTED.
23. THE USE OF 'NM' CABLE FOR BRANCH CIRCUIT WIRING IS ACCEPTABLE WHERE ALLOWED BY THE NEC AND AUTHORITY HAVING JURISDICTION.

<u>BDA SYSTEM:</u>

24. ALL BUILDINGS WITHIN THIS PROJECT SHALL HAVE AN APPROVED THIRD-PARTY PROVIDE A SPECTRUM ANALYSIS GRID TEST OF THE BUILDINGS AND PROVIDE A COPY OF THE ANALYSIS OF THE RADIO SIGNAL STRENGTH AND RECOMMENDATIONS FOR THE REQUIREMENT OF A DAS/BDA SYSTEM (WHETHER NECESSARY TO INSTALL) TO THE G.C. AND AHJ. IF REQUIRED TO BE ADDED, BASED ON TESTING, DESIGN WILL BE PROVIDED BY OTHERS (DAS/BDA CONTRACTOR) UNDER A SEPARATE PERMIT AND IN CONFORMANCE TO THE FFPC, FAC AND NFPA. FINAL TESTING WILL BE REQUIRED AT COMPLETION OF THE BUILDING CONSTRUCTION PRIOR TO OBTAINING THE CERTIFICATE OF OCCUPANCY. THE SIGNAL STRENGTH SHALL MEET THE REQUIREMENTS OF THE FLORIDA FIRE PREVENTION CODE 6TH EDITION; NFPA 1 11.10; NFPA 72-2016 EDITION 24.5.2.2, 24.5.2.3; AND MUST BE TESTED IN ACCORDANCE WITH THE PROVISIONS SET FORTH IN NFPA 72-2016 EDITION 14.4.10 (1-6) AND A14.4.10 (1-3).

LAFATE WILSON
architects

1030 arlington ave n, st petersburg fl 33705
(727) 490-9483
studio@lafatewilson.com

THE ARCHITECT'S COMMON LAW COPYRIGHT AND OTHER PROPERTY RIGHTS ARE HEREBY RESERVED IN THE IDEAS, DESIGNS, PLANS, DRAWINGS, AND SPECIFICATIONS SHALL NOT BE REPRODUCED OR CONVEYED IN ANY MANNER NOR ASSIGNED TO ANY THIRD PARTY WITHOUT FIRST OBTAINING THE EXPRESS WRITTEN PERMISSION OF THE ARCHITECT.

OLD MEMORIAL

13600 National Golf Dr
Tampa, FL 33626

no.	description	date
	PERMIT SET	04.24.26

E0.00

ELECTRICAL SYMBOLS LEGEND

sheet size 24" x 36"

Reviewed for Code Compliance
With The Florida Building Code
ECS, Florida LLC
41-5640-BLD2 7/20/2026
Electrical Review - Roger Sanders PX651 - Reviewed - 7/14/2026
Mechanical Review - Roger Sanders PX651 - Reviewed - 7/14/2026
Plumbing Review - Roger Sanders PX651 - Reviewed - 7/14/2026
Fire Review - Jay Tarquinio NA to Private Provider - 7/16/2026
Building Review - Roger Sanders PX651 - Reviewed - 7/14/2026

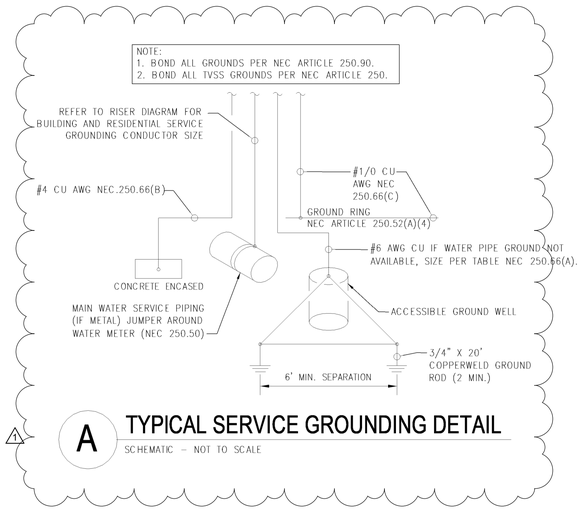

1 A TYPICAL SERVICE GROUNDING DETAIL

SCHEMATIC – NOT TO SCALE

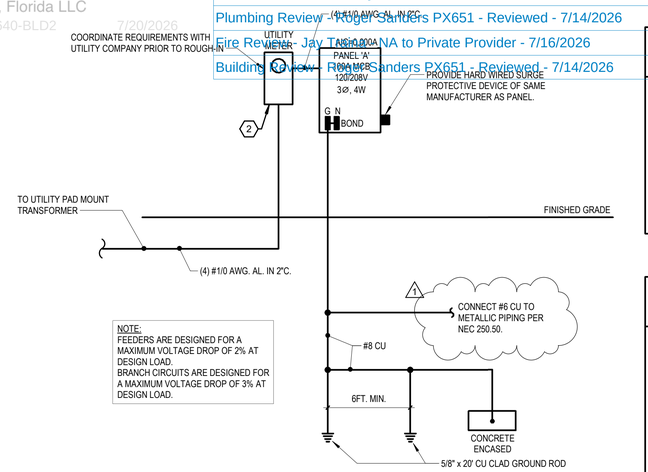

NOTE:
FEEDERS ARE DESIGNED FOR A MAXIMUM VOLTAGE DROP OF 2% AT DESIGN LOAD.
BRANCH CIRCUITS ARE DESIGNED FOR A MAXIMUM VOLTAGE DROP OF 3% AT DESIGN LOAD.

2 Electrical Riser Diagram Sand & Chemical Storage Building 2

1" = 1'-0"

GENERAL NOTES:

A. DO NOT SCALE ELECTRICAL DRAWING FOR ANY DIMENSIONS.

B. ALL WORK SHALL COMPLY WITH THE LATEST ADOPTED EDITION OF THE NATIONAL ELECTRICAL CODE, STATE, AND LOCAL CODES. PROVIDE GROUNDING AND BONDING PER NEC 250.

C. SEE SINGLE LINE DIAGRAM FOR FEEDER WIRE AND CONDUIT SIZE. ALL CIRCUITS NOT SIZED ON DRAWING SHALL BE INSTALLED TO MEET MINIMUM SIZE REQUIRED BY NEC. ALL CONDUCTORS SHALL HAVE AN EQUIPMENT GROUND WIRE SIZED PER NEC.

D. FIELD VERIFY EXACT LOCATION OF ALL DEVICES AND EQUIPMENT PRIOR TO ROUGH IN.

REFERENCE NOTES:

1. PROVIDE PUSHBUTTON CONTROL AND LOW VOLTAGE WIRING FOR GARAGE DOOR OPENER AS REQUIRED BY OWNER/MANUFACTURER.
2. PROVIDE 120V CEILING MOUNTED OUTLET FOR GARAGE DOOR OPENER. COORDINATE LOCATION WITH DOOR INSTALLER PRIOR TO ROUGH-IN. PROVIDE LOW VOLTAGE WIRING AND PUSH BUTTON LOCATED NEAR DOOR AS REQUIRED.
3. PROVIDE EXTERIOR GARAGE DOOR KEYPAD. COORDINATE LOCATION AND REQUIREMENTS WITH GARAGE DOOR INSTALLER. PROVIDE LOW VOLTAGE WIRING AS REQUIRED.
4. CONNECT CIRCUIT VIA PHOTOCELL FOR AUTOMATIC CONTROL OF LIGHT FIXTURES.
5. PROVIDE CEILING MOUNTED OCCUPANCY SENSOR FOR AUTOMATIC CONTROL OF ROOM LIGHTING. SENSOR SHALL OVERRIDE WALL CONTROL AND "TURN OFF" ROOM LIGHTS IF ROOM UNOCCUPIED FOR MORE THAN 30 MINUTES. PROVIDE ADDITIONAL SENSORS, RELAY PACKS, CONTROL WIRING, ETC. AS REQUIRED FOR COMPLETE COVERAGE OF ROOM AND CIRCUITS/SWITCH LEGS SHOWN. CONTROLS SHALL BE "MANUAL ON/AUTOMATIC OFF" WITH THE EXCEPTION OF RESTROOMS, PUBLIC CORRIDORS, AND LOBBIES. THESE AREAS SHALL BE FULLY AUTOMATIC ON/AUTOMATIC OFF" IN ACCORDANCE WITH THE 2023 FLORIDA BUILDING CODE 8TH EDITION.
6. PROVIDE WALL MOUNTED, DUAL TECHNOLOGY, LOW VOLTAGE VACANCY SENSOR, WATTSTOPPER #DW-100-24 (OR APPROVED SUBSTITUTION) FOR AUTOMATIC CONTROL OF LIGHTING. CONNECT LIGHTING IN SPACE AS SHOWN ON PLANS VIA WATTSTOPPER LIGHTING POWER PACK #BZ-200 (OR APPROVED SUBSTITUTION). PROVIDE ALL ADDITIONAL POWER PACKS, RELAYS, SENSORS AS REQUIRED FOR COMPLETE COVERAGE OF SPACE AND SWITCHING AS SHOWN ON PLANS. INSTALLATION SHALL COMPLY WITH FLORIDA ENERGY CONSERVATION CODE 2023 8TH EDITION SECTION C405.6.1.
7. PROVIDE BUILDING MOUNTED DISCONNECT SWITCHES FOR COMPLETE POWER SHUT-OFF OF LIGHTING AND RECEPTACLE CIRCUITS FED FROM EXISTING PANEL 'A' IN EXISTING MAINTENANCE BUILDING #1, SEE SHEET E1.01.1 FOR PANEL LOCATION AND SHEET E6.01 FOR PANEL SCHEDULE CONFIGURATION.

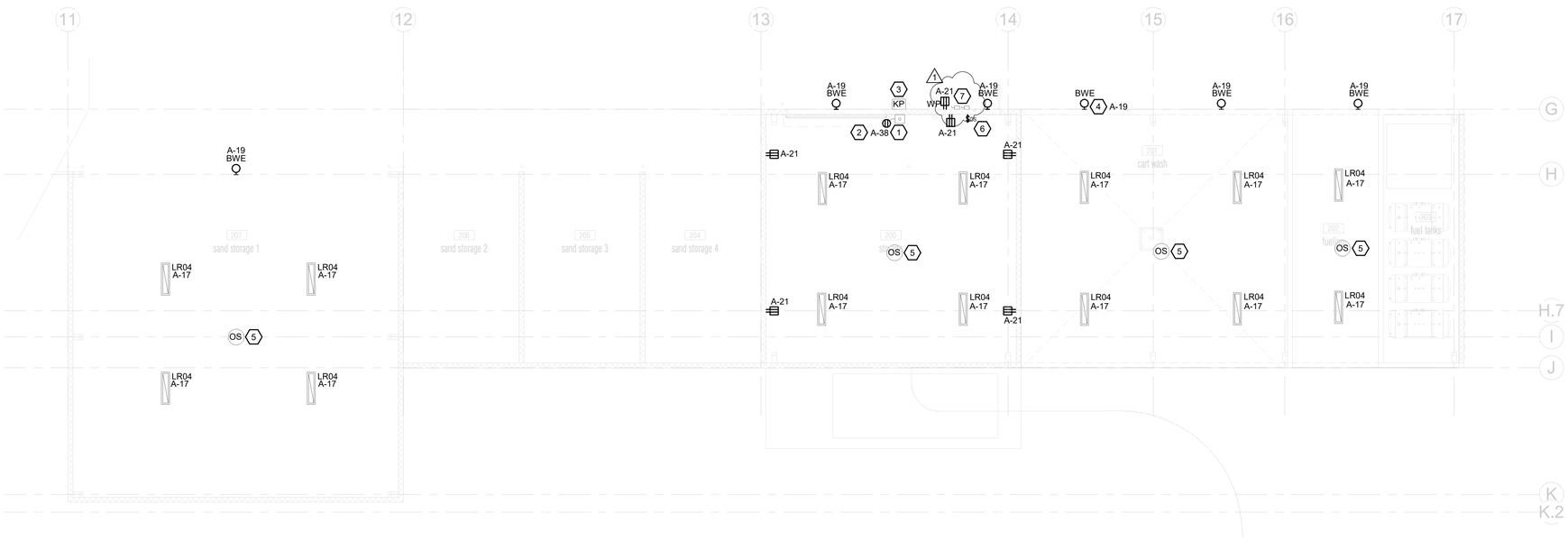

1 SAND AND CHEM STORAGE FLOOR PLAN - ELECTRICAL

1/8" = 1'-0"

LAFATE WILSON
architects
1030 arlington ave n, st petersburg fl 33705
(727) 490-9483
studio@lafatewilson.com

THE ARCHITECT'S COMMON LAW COPYRIGHT AND OTHER PROPERTY RIGHTS ARE HEREBY RESERVED IN THE IDEAS, DESIGNS, PLANS, DRAWINGS, AND SPECIFICATIONS SHALL NOT BE REPRODUCED OR CONVEYED IN ANY MANNER NOR ASSIGNED TO ANY THIRD PARTY WITHOUT FIRST OBTAINING THE EXPRESS WRITTEN PERMISSION OF THE ARCHITECT.

OLD MEMORIAL

13600 National Golf Dr
Tampa, FL 33626

no.	description	date
	PERMIT SET	04.24.26
1	PERMIT COMMENTS	06.19.26

E1.02.1

BUILDING 2 FLOOR PLAN - ELECTRICAL

sheet size 24" x 36"

Reviewed for Code Compliance
With The Florida Building Code
ECS, Florida LLC
41-5640-BLD2 7/20/2026

Electrical Review - Roger Sanders PX651 - Reviewed - 7/14/2026
~~Mechanical Review - Roger Sanders PX651 - Reviewed - 7/14/2026~~
Plumbing Review - Roger Sanders PX651 - Reviewed - 7/14/2026
Fire Review - Jay Traina - NA to Private Provider - 7/16/2026
Building Review - Roger Sanders PX651 - Reviewed - 7/14/2026

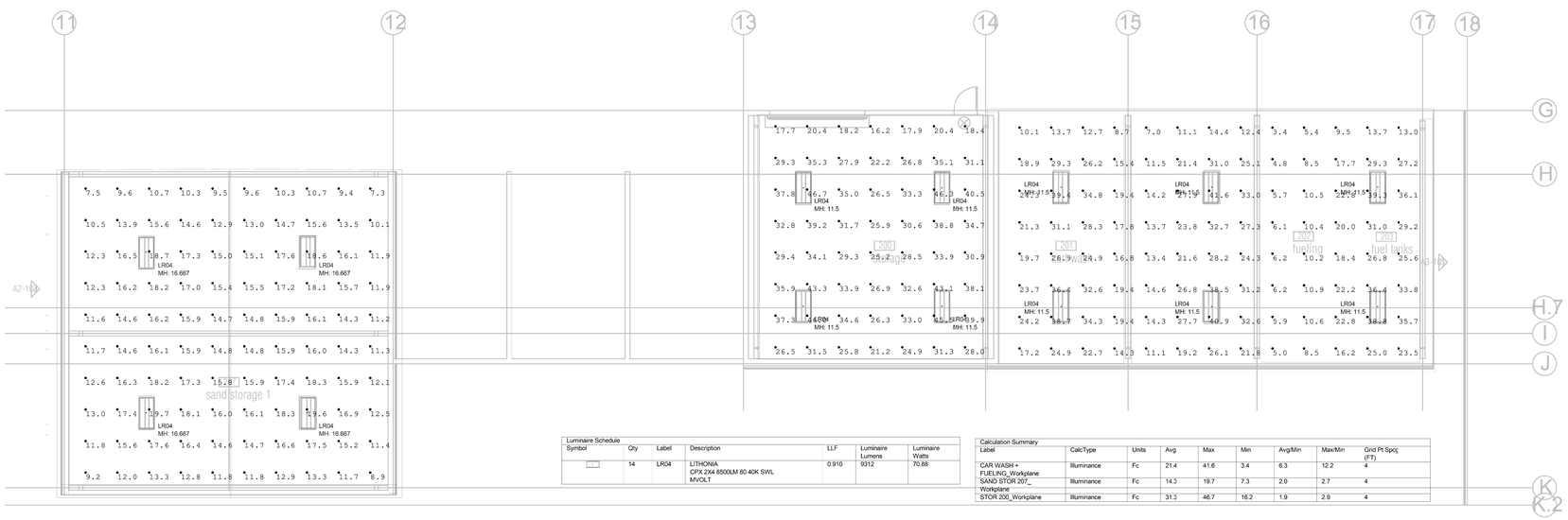

Luminaire Schedule

Symbol	Qty	Label	Description	LLF	Luminaire Lumens	Luminaire Watts
	14	LR04	LITHONIA CPX 2X4 8500LM 80 40K SWL M/OLT	0.910	9312	70.88

Calculation Summary

Label	CalcType	Units	Avg	Max	Min	Avg/Min	Max/Min	Grid Pt Spcg (FT)
CAR WASH + FUELING_Workplane	Illuminance	Fc	21.4	41.6	3.4	6.3	12.2	4
SAND STOR 207_Workplane	Illuminance	Fc	14.3	19.7	7.3	2.0	2.7	4
STOR 200_Workplane	Illuminance	Fc	31.3	46.7	16.2	1.9	2.9	4

LAFATE WILSON
architects

1030 arlington ave n, st petersburg fl 33705
(727) 490-9483
studio@lafatewilson.com

THE ARCHITECT'S COMMON LAW COPYRIGHT AND OTHER PROPERTY RIGHTS ARE HEREBY RESERVED IN THE IDEAS, DESIGNS, PLANS, DRAWINGS, AND SPECIFICATIONS SHALL NOT BE REPRODUCED OR CONVEYED IN ANY MANNER NOR ASSIGNED TO ANY THIRD PARTY WITHOUT FIRST OBTAINING THE EXPRESS WRITTEN PERMISSION OF THE ARCHITECT.

OLD MEMORIAL

13600 National Golf Dr
Tampa, FL 33626

no.	description	date
	PERMIT SET	04.24.26
1	PERMIT COMMENTS	06.19.26

E1.02.2

BUILDING 2 FLOOR PLAN - ELECTRICAL LIGHTING PHOTOMETRY

sheet size 24" x 36"

Reviewed for Code Compliance
With The Florida Building Code
ECS, Florida LLC
41-5
Electrical Review - Roger Sanders PX651 - Reviewed - 7/14/2026
Mechanical Review - Roger Sanders PX651 - Reviewed - 7/14/2026
Plumbing Review - Roger Sanders PX651 - Reviewed - 7/14/2026
Fire Review - Jay Traina - NA to Private Provider - 7/16/2026
Building Review - Roger Sanders PX651 - Reviewed - 7/14/2026

ELECTRICAL LIGHTING FIXTURE SCHEDULE – BUILDING

TYPE	DESCRIPTION	MANUFACTURER	MODEL	VOLTS	LAMP QTY	LAMP WATTS	LAMP MODEL	FIXTURE WATTS
BWE	EXTERIOR FULL CUTOFF LED EGRESS LIGHT, BRONZE FINISH INTEGRAL PHOTOCELL, EMERGENCY BATTERY, SELF DIAGNOSTICS	ROYAL PACIFIC	RELSLED-OB	120	1	18	LED	18
EM	INTERIOR WALL MOUNTED EMERGENCY LIGHT THERMOPLASTIC HOUSING, TWIN HEADS AND INTEGRAL BATTERY BACKUP.	DUAL LITE	EV4-02L	120	2	2	LED	4
X	EXIT SIGN WHITE THERMOPLASTIC HOUSING, RED LETTERING, DIRECTIONAL CHEVRONS AND INTEGRAL BATTERY BACKUP	DUAL LITE	EVE-U-R-W-E	120	1	–	LED	–

NOTES:
1) DIVISION 16 CONTRACTOR SHALL VERIFY ALL FIXTURE TYPES WITH LIGHTING PHOTOMETRY PLANS AND SCHEDULES. VERIFY ALL PROVISIONS WITH OWNER PRIOR TO ORDERING.

EXISTING PANEL C

LOCATION: BLDG 1 | VOLTAGE: 208Y/120 V 3Φ 4W | MIN. AIC RATING: 10K AIC
TYPE: SQUARE D | MAINS: 100 A ☑ MLO ☐ MCB | MOUNTING: SURFACE
FED FROM: 100A SERVICE DISC SW | LUGS: ☐ SUB-FEED | FEED-THRU | ENCLOSURE: NEMA 1
NOTES: PROVIDE TYPED WRITTEN DIRECTORY; PROVIDE GROUND & NEUTRAL BUS

CKT.	CIRCUIT DESCRIPTION	NOTES	BRANCH CIRCUIT Φ	NEUT	GND	COND	BKR	LOAD KVA	PHASE Φ	LOAD KVA	BKR	BRANCH CIRCUIT Φ	NEUT	GND	COND	NOTES	CIRCUIT DESCRIPTION	CKT.
1	BATTERY CHARGER						20/1	1.90	A	1.90	20/1						VERIFY EXISTING LOAD SERVED	2
3	BATTERY CHARGER						20/1	1.90	B	1.90	20/1						VERIFY EXISTING LOAD SERVED	4
5	RECEPTACLE MTD ON LIFT						20/1	0.36	C	1.90	20/1						VERIFY EXISTING LOAD SERVED	6
7	CHEMICAL MIXER BUILDING						30/2	2.00	A	2.88	30/3						AIR COMPRESSOR	8
9	--						--	2.00	B	2.88	---						---	10
11	SPACE						-/2		C	2.88	---						---	12
13	--						--		A	1.60	20/2						LIFT	14
15	ICE MACHINE 'B'						20/2	1.60	B	1.60	--						--	16
17	--						--	1.60	C	1.60	20/2						ICE MACHINE 'A'	18
19	SPACE						-/2		A	1.60	--						--	20
21	--						--		B		-/2						SPACE	22
23	SPACE						-/1		C		--						--	24

EQUIPMENT SERVED	CONN. LOAD	L.F.	D.F.	DEMAND LOAD
LIGHTING	0.00 KVA		125%	0.00 KVA
RECEPTACLES - GENERAL	9.86 KVA		100%	9.86 KVA
EQUIPMENT	22.24 KVA		100%	22.24 KVA

NOTES

TOTAL DEMAND LOAD: 32.10 KVA
TOTAL DEMAND AMPS: 89.10 AMPS

EXISTING PANEL A

LOCATION: BLDG 1 | VOLTAGE: 208Y/120 V 3Φ 4W | MIN. AIC RATING: 42K AIC
TYPE: SQUARE D | MAINS: 400 A ☑ MLO ☐ MCB | MOUNTING: SURFACE
FED FROM: EXISTING METER | LUGS: ☐ SUB-FEED ☑ FEED-THRU | ENCLOSURE: NEMA 1
NOTES: PROVIDE TYPED WRITTEN DIRECTORY; PROVIDE GROUND & NEUTRAL BUS

CKT.	CIRCUIT DESCRIPTION	NOTES	BRANCH CIRCUIT Φ	NEUT	GND	COND	BKR	LOAD KVA	PHASE Φ	LOAD KVA	BKR	BRANCH CIRCUIT Φ	NEUT	GND	COND	NOTES	CIRCUIT DESCRIPTION	CKT.
1	STORAGE LIGHTING	2	12	12	12	1/2"	20/1	1.70	A	1.50	20/1	12	12	12	1/2"	2	BLDG 1 GARAGE DOOR OPENER	2
3	MAINTENANCE LIGHTING	2	12	12	12	1/2"	20/1	1.20	B	1.50	20/1	12	12	12	1/2"	2	BLDG 1 GARAGE DOOR OPENER	4
5	MAINTENANCE LIGHTING	2	12	12	12	1/2"	20/1	1.20	C	1.50	20/1	12	12	12	1/2"	2	BLDG 1 GARAGE DOOR OPENER	6
7	OFFICE LIGHTING	2	12	12	12	1/2"	20/1	1.00	A	1.50	20/1	12	12	12	1/2"	2	BLDG 1 GARAGE DOOR OPENER	8
9	EXTERIOR LIGHTING	2	12	12	12	1/2"	20/1	1.00	B	1.50	20/1	12	12	12	1/2"	2	BLDG 1 GARAGE DOOR OPENER	10
11	BLDG 1 GARAGE DOOR OPENER	2	12	12	12	1/2"	20/1	1.00	C	1.50	20/1	12	12	12	1/2"	2	BLDG 1 GARAGE DOOR OPENER	12
13	BLDG 1 GARAGE DOOR OPENER	2	12	12	12	1/2"	20/1	1.00	A	1.50	20/1	12	12	12	1/2"	2	BLDG 1 GARAGE DOOR OPENER	14
15	BLDG 1 GARAGE DOOR OPENER	2	12	12	12	1/2"	20/1	1.00	B	1.50	20/1	12	12	12	1/2"	2	BLDG 1 GARAGE DOOR OPENER	16
17	SAND STORAGE LIGHTING	2	12	12	12	1/2"	20/1	1.20	C	1.50	20/1	12	12	12	1/2"	2	BLDG 1 GARAGE DOOR OPENER	18
19	SAND STORAGE EXTERIOR LTG	2	12	12	12	1/2"	20/1	0.50	A	1.50	20/1	12	12	12	1/2"	2	BLDG 3 GARAGE DOOR OPENER	20
21	SAND STORAGE RECEPTACLES	2	12	12	12	1/2"	20/1	1.20	B	1.50	20/1	12	12	12	1/2"	2	BLDG 3 GARAGE DOOR OPENER	22
23	CHEM STORAGE LIGHTING	2	12	12	12	1/2"	20/1	1.00	C	1.50	20/1	12	12	12	1/2"	2	BLDG 3 GARAGE DOOR OPENER	24
25	CHEM STORAGE EXTERIOR LTG	2	12	12	12	1/2"	20/1	0.50	A	1.20	20/1	12	12	12	1/2"	2	MAINTENANCE RECEPTACLES	26
27	CHEM STORAGE RECEPTACLES	2	12	12	12	1/2"	20/1	1.20	B	1.20	20/1	12	12	12	1/2"	2	MAINTENANCE RECEPTACLES	28
29	EWH-1	2	10	10	10	3/4"	30/2	2.25	C	1.50	30/2	10	10	10	3/4"	2	MAINTENANCE GRINDER	30
31			10					2.25	A	1.50		10						32
33	AHU-1.1	2	4	4	8	1 1/4"	60/2	9.44	B	1.50	30/2	10	10	10	3/4"	2	MAINTENANCE GRINDER	34
35			4					9.44	C	1.50		10						36
37	CU-1.1 (NON-CONCURRENT)	2	4	4	8	1 1/4"	60/2	7.57	A	1.50	20/1	12	12	12	1/2"	2	BLDG 2 GARAGE DOOR OPENER	38
39			4					7.57	B	4.15	50/2	6	6	8	1"	3	AIR COMPRESSOR	40
41	MAINTENANCE RESTROOM REC.	2	12	12	12	1/2"	20/1	0.54	C	4.15		6						42
43	CHEM STORAGE COMPRESSOR	3	8	8	8	3/4"	30/2	2.00	A	2.40	30/1	10	10	10	3/4"	2	EF-3.1	44
45	(VERIFY W/ EQUIP SPEC)		8				--	2.00	B	1.92	30/1	10	10	10	3/4"	2	EF-3.2	46
47	SPARE	1					20/1		C		20/1					1	SPARE	48
49	SPARE	1					20/1		A		20/1					1	SPARE	50
51	SPARE	1					20/1		B		20/1					1	SPARE	52
53	SPARE	1					20/1		C		20/1					1	SPARE	54

EQUIPMENT SERVED	CONN. LOAD	L.F.	D.F.	DEMAND LOAD
LIGHTING	9.30 KVA		125%	11.63 KVA
RECEPTACLES - GENERAL	4.80 KVA		100%	4.80 KVA
EQUIPMENT	69.04 KVA		100%	69.04 KVA

NOTES:
1) CONVERT EXISTING CIRCUIT TO NEW SPARE/SPACE.
2) PROVIDE NEW GFCI CIRCUIT BREAKER.
3) CONTRACTOR SHALL VERIFY EQUIPMENT REQUIREMENTS AND ADJUST ELECTRICAL COMPONENTS, AS NECESSARY..

TOTAL DEMAND LOAD: 85.46 KVA
TOTAL DEMAND AMPS: 237.22 AMPS

PANEL P

LOCATION: UTILITY ROOM | VOLTAGE: 120/240 V 1Φ 3W | MIN. AIC RATING: 65K AIC
TYPE: SQUARE-D "NQ" | MAINS: 600 A ☑ MLO ☐ MCB | MOUNTING: SURFACE
FED FROM: MAIN DISC SWITCH | LUGS: ☐ SUB-FEED ☐ FEED-THRU | ENCLOSURE: NEMA 1
NOTES: PROVIDE TYPED WRITTEN DIRECTORY; PROVIDE GROUND & NEUTRAL BUS

CKT.	CIRCUIT DESCRIPTION	NOTES	BRANCH CIRCUIT Φ	NEUT	GND	COND	BKR	LOAD KVA	PHASE Φ	LOAD KVA	BKR	BRANCH CIRCUIT Φ	NEUT	GND	COND	NOTES	CIRCUIT DESCRIPTION	CKT.
1	STORAGE LIGHTING	1	12	12	12	1/2"	20/1	1.00	A	4.15	50/2	6	6	8	1"		AIR COMPRESSOR	2
3	STORAGE LIGHTING	1	12	12	12	1/2"	20/1	1.20	B	4.15		6						4
5	BREAKROOM LIGHTING	1	12	12	12	1/2"	20/1	1.00	A	1.50	20/1	12	12	12	1/2"		RESTROOM RECEPTACLE	6
7	BREAKROOM LIGHTING	1	12	12	12	1/2"	20/1	1.00	B	0.84	20/1	12	12	12	1/2"		FRIDGE	8
9	EXTERIOR LIGHTING	1	12	12	12	1/2"	20/1	0.50	A	0.84	20/1	12	12	12	1/2"		FRIDGE	10
11	MICROWAVE/HOOD		12	12	12	1/2"	20/1	1.20	B	4.00	40/2	8	8	10	1"		RANGE	12
13	MICROWAVE/HOOD		12	12	12	1/2"	20/1	1.20	A	4.00		8						14
15	MICROWAVE/HOOD		12	12	12	1/2"	20/1	1.20	B	0.72	20/1	12	12	12	1/2"		STORAGE RECEPTACLES	16
17	MICROWAVE/HOOD		12	12	12	1/2"	20/1	1.20	A	0.72	20/1	12	12	12	1/2"		STORAGE RECEPTACLES	18
19	FRIDGE		12	12	12	1/2"	20/1	0.84	B	4.00	40/2	8	8	10	1"		RANGE	20
21	FRIDGE		12	12	12	1/2"	20/1	0.84	A	4.00		8						22
23	FRIDGE		12	12	12	1/2"	20/1	0.84	B	4.00	40/2	8	8	10	1"		RANGE	24
25	WATER FOUNTAIN		12	12	12	1/2"	20/1	1.50	A	4.00		8						26
27	GARBAGE DISPOSAL		12	12	12	1/2"	20/1	1.50	B	4.00	40/2	8	8	10	1"		RANGE	28
29	DISHWASHER/DISPOSAL		12	12	12	1/2"	20/1	1.50	A	4.00		8						30
31	DISHWASHER/DISPOSAL		12	12	12	1/2"	20/1	1.50	B	1.50	20/1	12	12	12	1/2"		BREAKROOM RECEPTACLES	32
33	COMMON AREA LIGHTING	1	12	12	12	1/2"	20/1	1.20	A	1.50	20/1	12	12	12	1/2"		BREAKROOM RECEPTACLES	34
35	COMMON AREA LIGHTING	1	12	12	12	1/2"	20/1	1.20	B	2.25	30/2	10	10	10	3/4"		EWH-2	36
37	DISHWASHER/DISPOSAL		12	12	12	1/2"	20/1	1.50	A	2.25		10						38
39	DISHWASHER		12	12	12	1/2"	20/1	1.20	B	2.25	30/2	10	10	10	3/4"		EWH-3	40
41	FRIDGE		12	12	12	1/2"	20/1	0.84	A	2.25		10						42
43	FRIDGE		12	12	12	1/2"	20/1	0.84	B	3.00	40/2	8	8	10	1"		INDUCTION COOKER	44
45	COMMON AREA RECEPTACLE		12	12	12	1/2"	20/1	0.72	A	3.00		8						46
47	RESTROOM RECEPTACLE		12	12	12	1/2"	20/1	0.72	B	2.50	30/2	10	10	10	3/4"		DRYER	48
49	RESTROOM RECEPTACLE		12	12	12	1/2"	20/1	0.72	A	2.50		10						50
51	ROOM RECEPTACLE		12	12	12	1/2"	20/1	0.54	B	1.50	20/1	12	12	12	1/2"		WASHER	52
53	ROOM RECEPTACLE		12	12	12	1/2"	20/1	0.54	A	2.50	30/2	10	10	10	3/4"		DRYER	54
55	ROOM RECEPTACLE		12	12	12	1/2"	20/1	0.54	B	2.50		10						56
57	ROOM RECEPTACLE		12	12	12	1/2"	20/1	0.54	A	1.50	20/1	12	12	12	1/2"		WASHER	58
59	ROOM RECEPTACLE		12	12	12	1/2"	20/1	0.54	B	5.37	60/2	4	4	8	1 1/4"		AHU-4.1	60
61	ROOM RECEPTACLE		12	12	12	1/2"	20/1	0.54	A	5.37		4						62
63	ROOM RECEPTACLE		12	12	12	1/2"	20/1	0.54	B	5.37	60/2	4	4	8	1 1/4"		AHU-4.2	64
65	ROOM RECEPTACLE		12	12	12	1/2"	20/1	0.54	A	5.37		4						66
67	RESTROOM RECEPTACLE		12	12	12	1/2"	20/1	0.72	B	5.37	60/2	4	4	8	1 1/4"		AHU-4.3	68
69	RESTROOM RECEPTACLE		12	12	12	1/2"	20/1	0.72	A	5.37		4						70
71	SPARE						20/1		B		20/1						SPARE	72
73	SPARE						20/1		A		20/1						SPARE	74
75	SPARE						20/1		B		20/1						SPARE	76
77	SPARE						20/1		C		20/1						SPARE	78
79	SPARE						20/1		A		20/1						SPARE	80
81	SPARE						20/1		B		20/1						SPARE	82
83	SPARE						20/1		A		20/1						SPARE	84
85	CU-1.1 (NON-CONCURRENT)		6	6	8	1"	50/2	3.23	B	4.22	50/2	6	6	8	1"		AHU-4.4	86
87			6					3.23	A	4.22		6						88
89	CU-1.2 (NON-CONCURRENT)		6	6	8	1"	50/2	3.23	B	4.22	50/2	6	6	8	1"		AHU-4.5	90
91			6					3.23	A	4.22		6						92
93	CU-1.3 (NON-CONCURRENT)		6	6	8	1"	50/2	3.23	B	4.22	50/2	6	6	8	1"		AHU-4.6	94
95			6					3.23	A	4.22		6						96
97	CU-1.4 (NON-CONCURRENT)		6	6	8	1"	50/2	3.06	B		20/2						SPARE	98
99			6					3.06	A									100
101	CU-1.5 (NON-CONCURRENT)		6	6	8	1"	50/2	3.06	B		30/2						SPARE	102
103			6					3.06	A									104
105	CU-1.6 (NON-CONCURRENT)		6	6	8	1"	50/2	3.06	B		50/2						SPARE	106
107			6					3.06	A									108
109	SPACE								B								SPACE	110
111	SPACE								A								SPACE	112
113	SPACE								B								SPACE	114
115	SPACE								A								SPACE	116
117	SPACE								B								SPACE	118
119	SPACE								A								SPACE	120
121	SPACE								B								SPACE	122
123	SPACE								A								SPACE	124
125	SPACE								B								SPACE	126

EQUIPMENT SERVED	CONN. LOAD	L.F.	D.F.	DEMAND LOAD
LIGHTING	7.10 KVA		125%	8.88 KVA
RECEPTACLES - GENERAL	12.42 KVA		**	11.21 KVA
EQUIPMENT	64.00 KVA		100%	64.00 KVA
COOLING	0.00 KVA		100%	0.00 KVA
KITCHEN	57.32 KVA		65%	37.26 KVA

NOTES:
1) ROUTE CIRCUIT THRU CONTACTOR FOR AUTOMATIC CONTROL OF LIGHTING, SEE DETAIL E7.01.

**FIRST 10KVA + 50% OF REMAINING

TOTAL DEMAND LOAD: 121.34 KVA
TOTAL DEMAND AMPS: 505.59 AMPS

EXISTING PANEL B

LOCATION: BLDG 1 | VOLTAGE: 208Y/120 V 3Φ 4W | MIN. AIC RATING: 42K AIC
TYPE: SQUARE D | MAINS: 400 A ☑ MLO ☐ MCB | MOUNTING: SURFACE
FED FROM: 400A SERVICE DISC. SW. | LUGS: ☐ SUB-FEED | FEED-THRU | ENCLOSURE: NEMA 1
NOTES: PROVIDE TYPED WRITTEN DIRECTORY; PROVIDE GROUND & NEUTRAL BUS

CKT.	CIRCUIT DESCRIPTION	NOTES	BRANCH CIRCUIT Φ	NEUT	GND	COND	BKR	LOAD KVA	PHASE Φ	LOAD KVA	BKR	BRANCH CIRCUIT Φ	NEUT	GND	COND	NOTES	CIRCUIT DESCRIPTION	CKT.
1	BATTERY CHARGER						20/1	1.90	A	1.90	20/1						BATTERY CHARGER	2
3	BATTERY CHARGER						20/1	1.90	B	1.90	20/1						BATTERY CHARGER	4
5	GOLF CART LIGHTING						20/1	1.60	C	1.60	20/1						MAINTENANCE AREA RECEPT	6
7	GOLF CART LIGHTING						20/1	1.60	A	1.60	20/1						MAIN SHOP RECEPTACLE	8
9	VERIFY EXISTING LOAD SERVED						30/2	2.00	B	1.60	20/1						MAIN SHOP RECEPTACLE	10
11	--						--	2.00	C	1.60	20/1						MAINTENANCE AREA RECEPT	12
13	OFFICE LIGHTING / EF-1						20/1	1.60	A	1.20	20/1						REFRIGERATOR	14
15	EXTERIOR LIGHTING						20/1	1.60	B	1.00	20/1						COUNTER RECEPTACLE	16
17	MAIN SHOP LIGHTING						20/1	1.60	C	1.00	20/1						COUNTER RECEPTACLE	18
19	MAIN SHOP LIGHTING						20/1	1.60	A	0.80	20/1						OFFICE RECEPTACLE	20
21	VERIFY EXISTING LOAD SERVED						20/1	1.90	B	1.90	20/1						GRINDER	22
23	WELDER						50/2	5.20	C	0.50	20/1						EF-2 IN CART BARN	24
25							--	5.20	A	0.50	20/1						GOLF COURSE SPRINKLER	26
27	VERIFY EXISTING LOAD SERVED						20/2	1.60	B	0.50	20/1						GOLF COURSE SPRINKLER	28
29	--							1.60	C	1.60	20/2						ICE MACHINE	30
31	LIFT STATION						40/3	3.84	A	1.60	--							32
33							---	3.84	B	2.25	30/2						WATER HEATER	34
35	--						---	3.84	C	2.25	--							36
37	CU-1						30/3	2.88	A	9.60	100/3						AHU-1	38
39							---	2.88	B	9.60	---							40
41							---	2.88	C	9.60	---							42

EQUIPMENT SERVED	CONN. LOAD	L.F.	D.F.	DEMAND LOAD
LIGHTING	9.60 KVA		125%	12.00 KVA
RECEPTACLES - GENERAL	19.90 KVA		**	14.95 KVA
EQUIPMENT	40.22 KVA		100%	40.22 KVA
COOLING	37.44 KVA		100%	37.44 KVA

NOTES

**FIRST 10KVA + 50% OF REMAINING

TOTAL DEMAND LOAD: 104.61 KVA
TOTAL DEMAND AMPS: 290.37 AMPS

LAFATE WILSON
architects

1030 arlington ave n, st petersburg fl 33705
(727) 490-9483
studio@lafatewilson.com

THE ARCHITECT'S COMMON LAW COPYRIGHT AND OTHER PROPERTY RIGHTS ARE HEREBY RESERVED IN THE IDEAS, DESIGNS, PLANS, DRAWINGS, AND SPECIFICATIONS SHALL NOT BE REPRODUCED OR CONVEYED IN ANY MANNER NOR ASSIGNED TO ANY THIRD PARTY WITHOUT FIRST OBTAINING THE EXPRESS WRITTEN PERMISSION OF THE ARCHITECT.

OLD MEMORIAL

13600 National Golf Dr
Tampa, FL 33626

no.	description	date
	PERMIT SET	04.24.26
1	PERMIT COMMENTS	06.19.26

E6.01

ELECTRICAL SCHEDULES

sheet size 24" x 36"

Reviewed for Code Compliance
With The Florida Building Code
ECS, Florida LLC
41-5640-BLD2 7/20/2026

Electrical Review - Roger Sanders PX651 - Reviewed - 7/14/2026
Mechanical Review - Roger Sanders PX651 - Reviewed - 7/14/2026
Plumbing Review - Roger Sanders PX651 - Reviewed - 7/14/2026
Fire Review - Jay Traina - NA to Private Provider - 7/16/2026
Building Review - Roger Sanders PX651 - Reviewed - 7/14/2026

LAFATE WILSON
architects

1030 arlington ave n, st petersburg fl 33705
(727) 490-9483
studio@lafatewilson.com

THE ARCHITECT'S COMMON LAW COPYRIGHT AND OTHER PROPERTY RIGHTS ARE HEREBY RESERVED IN THE IDEAS, DESIGNS, PLANS, DRAWINGS, AND SPECIFICATIONS SHALL NOT BE REPRODUCED OR CONVEYED IN ANY MANNER NOR ASSIGNED TO ANY THIRD PARTY WITHOUT FIRST OBTAINING THE EXPRESS WRITTEN PERMISSION OF THE ARCHITECT.

Product Information

Firestop Putty Pad (CP 617, CP 617L and CP 617XL)

Product description
- A moldable firestop putty designed to help protect electrical outlet boxes

Product features
- Applied by hand
- Fast installation

Areas of application
- Protection of electrical outlet boxes

For use with
- Gypsum wall assemblies with wood or metal studs

Examples
- Where two outlets are within a single stud/cavity or within 24" measured horizontally (not back to back unless specified by the specific UL approval)

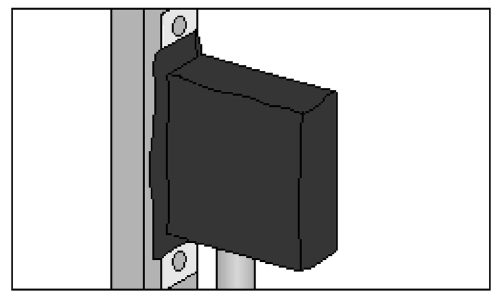

Technical Data*	CP 617
Dimensions (LxWxH)	CP 617: 6" x 7" x 1/8" (15 x 18 x 0.3 cm) CP 617L: 7" x 7" x 1/8" (18 x 18 x 0.3 cm) CP 617XL: 9" x 9" x 1/8" (23 x 23 x 0.3 cm)
Consistency	Moldable putty
Color	Red
Application temperature	40°F (5°C) to 95°F (35°C)
Storage temperature	40°F (5°C) to 104°F (40°C)
Curing time	Non-curing
Density	1.48 g/cm³
Intumescent activation	Approx. 220°F to 250°F (104°C to 121°C)
Volatile solvents	None
Asbestos fibers	None
Surface burning characteristics (ASTM E 84-96)	Flame Spread: 15 Smoke development: 10
Sound transmission classification (ASTM E 90-97)	59 (Relates to specific construction)
Tested in accordance with • UL 263 • ASTM E 84 • ASTM G21	

*At 73°F (23°C) and 50% relative humidity

WALL OPENING PROTECTIVE MATERIAL FIRE RESISTANCE CLASSIFICATION SEE PRODUCT CATEGORY IN UL FIRE RESISTANCE DIRECTORY 66Y7

FM APPROVED

Installation instructions for CP 617

Notice
- Before handling, read Material Safety Data Sheet and product label for safe usage and health information.
- Instructions below are general guidelines — always refer to the applicable listing (CUV) in the UL Fire Resistance Directory or Hilti Firestop Systems Guide for complete installation information

Application of firestop putty
1. After ensuring box is cleaned of loose debris, dirt, oil, moisture, frost and wax, remove label from one side of pad. For a 1 to 2 hour fire rating, one CP 617 pad is required. Exposed side of pad is placed against box.
2. CP 617 Firestop Putty Pads are to be installed to completely cover the exterior surfaces of the outlet box (except for the side of the outlet box against the stud) and completely seal against the stud within the stud cavity.
3. Reshape CP 617 to fit around conduit or cables.
4. Press CP 617 to all sides of electrical box.
5. Remove other side of label.

Not for use
- In areas exposed to water

Storage
- Store only in the original packaging in a location at temperatures 40°F (5°C) to 104°F (40°C)

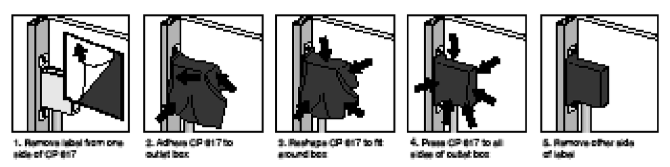

Hilti Firestop
Saving lives through innovation and education

Hilti. Outperform. Outlast.

Hilti, Inc. (U.S.) 1-800-879-8000 • www.us.hilti.com • en español 1-800-879-5000 • Hilti Firestop Systems Guide

4 NTS FIRE STOP PUTTY PAD DETAIL - WOOD FRAMING

Classified by Underwriters Laboratories, Inc. to UL 1479 and CAN/ULC-S115

System No. W-L-1214

F Rating — 1 Hr
T Rating — 0 Hr

WL 1214

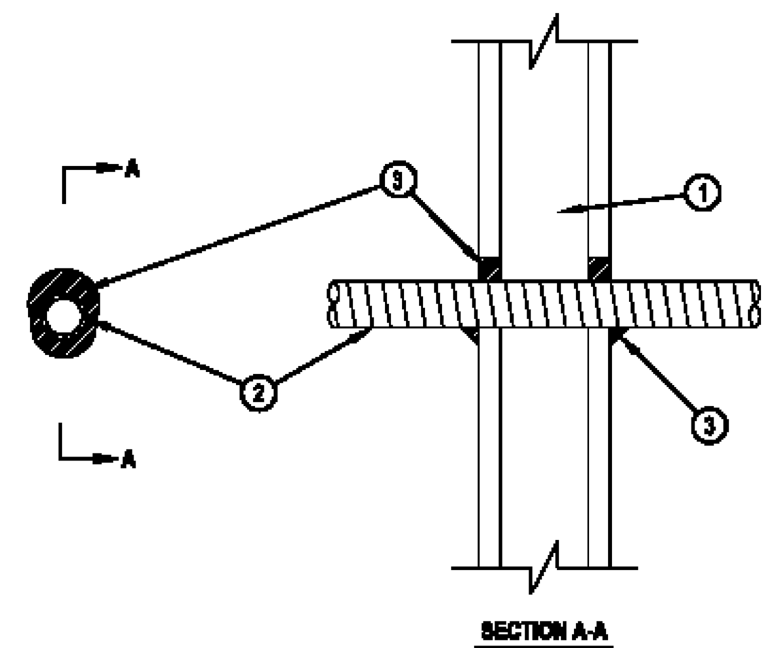

1. Wall Assembly — The fire-rated gypsum wallboard/stud wall assembly shall be constructed of the materials and in the manner specified in the individual U300 or U400 Series Wall and Partition Designs in the Fire Resistance Directory and shall include the following construction features:
   A. Studs — Wall framing shall consist of either wood studs or channel shaped steel studs. Wood studs to consist of 2 by 4 in. lumber spaced 16 in. OC. Steel studs to be min 2-1/2 in. wide, fabricated from min 25 MSG galvanized steel, spaced max 24 in. OC.
   B. Wallboard, Gypsum* — One layer of nom 5/8 in. gypsum wallboard, as specified in the individual Wall and Partition Design. Max diam of opening is 2 in.
2. Through Penetrants — Flexible Steel Conduit+ — Nom 1 in. diam (or smaller) flexible steel conduit. Max one conduit to be installed either concentrically or eccentrically within the firestop system. The annular space between pipe and periphery of opening shall be min 0 in. (point contact) to max 3/4 in. Conduit to be rigidly supported on both sides of floor or wall assembly.
   See Flexible Metal Conduit (DXUZ) category in the Electrical Construction Materials Directory for names of manufacturers.
3. Fill, Void or Cavity Material* — Sealant — Min 5/8 in. thickness of fill material applied within annulus flush with both surfaces of wall. At point contact location between conduit and wall, a min 1/2 in. bead of fill material shall be applied at the conduit/wallboard interface on both side of wall.
HILTI CONSTRUCTION CHEMICALS, DIV OF
HILTI INC — FS-ONE Sealant
+Bearing the UL Listing Mark
*Bearing the UL Classification Mark

HILTI
Hilti Firestop Systems

Reproduced by HILTI, Inc. Courtesy of Underwriters Laboratories, Inc. October 19, 2000

3 NTS UL FIRE RATED DETAIL (W-L-1214)

UL/cUL SYSTEM NO. W-J-1020

METAL PIPE THROUGH CONCRETE WALL OR BLOCK WALL

F-RATING = 2-HR.
T-RATING = 0-HR. OR 1/4-HR.
L-RATING AT AMBIENT = LESS THAN 1 CFM/SQ. FT.
L-RATING AT 400°F = 4 CFM/SQ. FT.

WJ1020e.091899

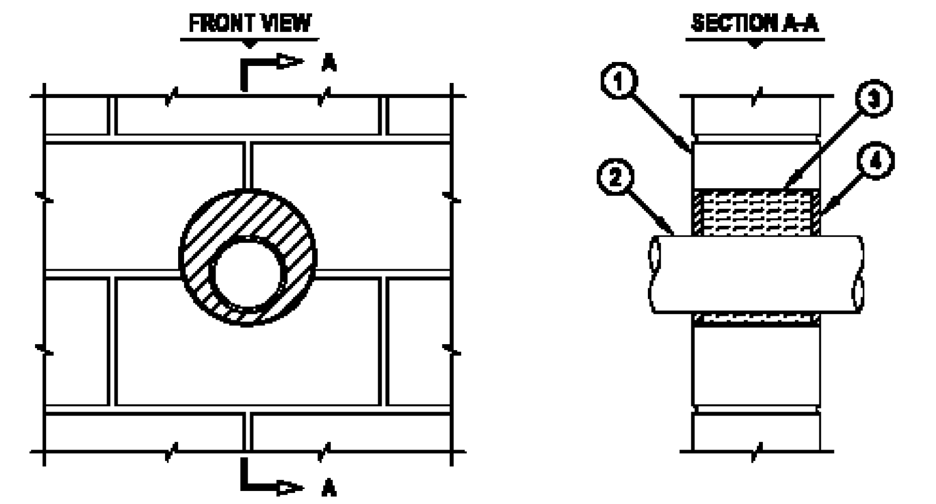

1. CONCRETE WALL ASSEMBLY (2-HR. FIRE-RATING):
   A. LIGHTWEIGHT OR NORMAL WEIGHT CONCRETE WALL (MIN. 5" THICK).
   B. ANY UL/ULC CLASSIFIED CONCRETE BLOCK WALL.
2. PENETRATING ITEM TO BE ONE OF THE FOLLOWING:
   A. MAXIMUM 4" NOMINAL DIAMETER COPPER PIPE.
   B. MAXIMUM 4" NOMINAL DIAMETER STEEL CONDUIT.
   C. MAXIMUM 4" NOMINAL DIAMETER EMT.
3. MINERAL WOOL (MIN. 4 PCF DENSITY), BACKER ROD, OR HILTI CF 128 FILLER FOAM TO BE USED AS A BACKER.
4. HILTI FS-ONE INTUMESCENT FIRESTOP SEALANT:
   A. MINIMUM 1/4" DEPTH WHEN EMT OR STEEL CONDUIT IS THE PENETRATING ITEM.
   B. MINIMUM 1/2" DEPTH WHEN COPPER PIPE IS THE PENETRATING ITEM.

NOTES : 1. MAXIMUM DIAMETER OF OPENING = 8".
2. ANNULAR SPACE = MINIMUM 3/4", MAXIMUM 3-1/2".
3. FOR HOLLOW BLOCK WALLS, USE NO. 8 STEEL WIRE MESH TO AID IN THE INSTALLATION.

HILTI FIRESTOP SYSTEMS	HILTI, Inc. Tulsa, Oklahoma USA (918) 252-6000	Sheet 1 of 1	Drawing No. WJ 1020e
		Scale 1/8" = 1"	
		Date SEPT. 18, 1999	

Saving Lives through Innovation and Education

2 NTS UL FIRE RATED DETAIL (W-J-1020)

Classified by Underwriters Laboratories, Inc. to UL 1479 and CAN/ULC-S115

System No. W-L-1175

F Ratings - 1 and 2 Hr (See Item 1)
T Rating - 0 Hr
L Rating at Ambient - Less Than 1 CFM/sq ft
L Rating at 400 F - Less Than 1 CFM/sq ft

WL 1175

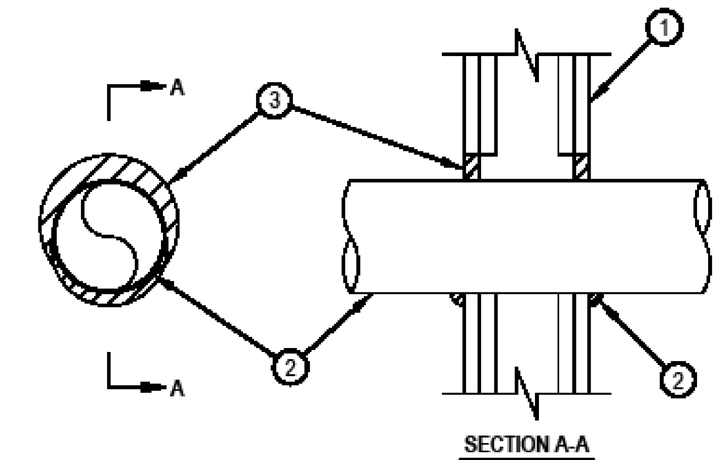

1. Wall Assembly — The 1 or 2 hr fire rated wallboard/stud wall assembly shall be constructed of the materials and in the manner specified in the individual U300 or U400 Series Wall and Partition Designs in the UL Fire Resistance Directory and shall include the following construction features.
   A. Studs — Wall framing shall consist of either wood studs or steel channel studs. Wood studs to consist of nom 2 by 4 in. lumber spaced 16 in. OC. Steel studs to be min 2-1/2 in. wide and spaced max 24 in. OC.
   B. Gypsum Board* — Nom 5/8 in. thick, 4 ft wide with square or tapered edges. The gypsum wallboard type, thickness, number of layers, fastener type and sheet orientation shall be as specified in the individual U300 or U400 Series Design in the Fire Resistance Directory. Max diam of opening is 5-1/2 in.
   The hourly F and T Ratings of the firestop system is equal to the hourly fire rating of the wall assembly in which it is installed.
2. Through Penetrant — One metallic tubing or conduit installed concentrically or eccentrically within the firestop system. Tube or conduit to be rigidly supported on both sides of wall assembly. The annular space between the tube or conduit and periphery of the steel sleeve shall be min 0 in. (point contact) to max 1 in. The following types and sizes of metallic tube or conduit may be used:
   A. Conduit — Nom 4 in. diam (or smaller) steel electrical metallic tubing or steel conduit.
3. Fill Void or Cavity Material* — Putty — Min 5/8 in. thickness of fill material applied within the annulus, flush with both surfaces of wall. At point contact location between penetrant and wall, a 1/4 in. crown of fill material shall be applied at the conduit/wall interface on both sides of the assembly, lapping 1/4 in. on the conduit and 1/4 in. beyond the periphery of the opening.
HILTI INC — CP618 Putty Stick

*Bearing the UL Classification Mark

HILTI
Hilti Firestop Systems

Reproduced by HILTI, Inc. Courtesy of Underwriters Laboratories, Inc. February 08, 2006

1 NTS UL FIRE RATED DETAIL (W-L-1175)

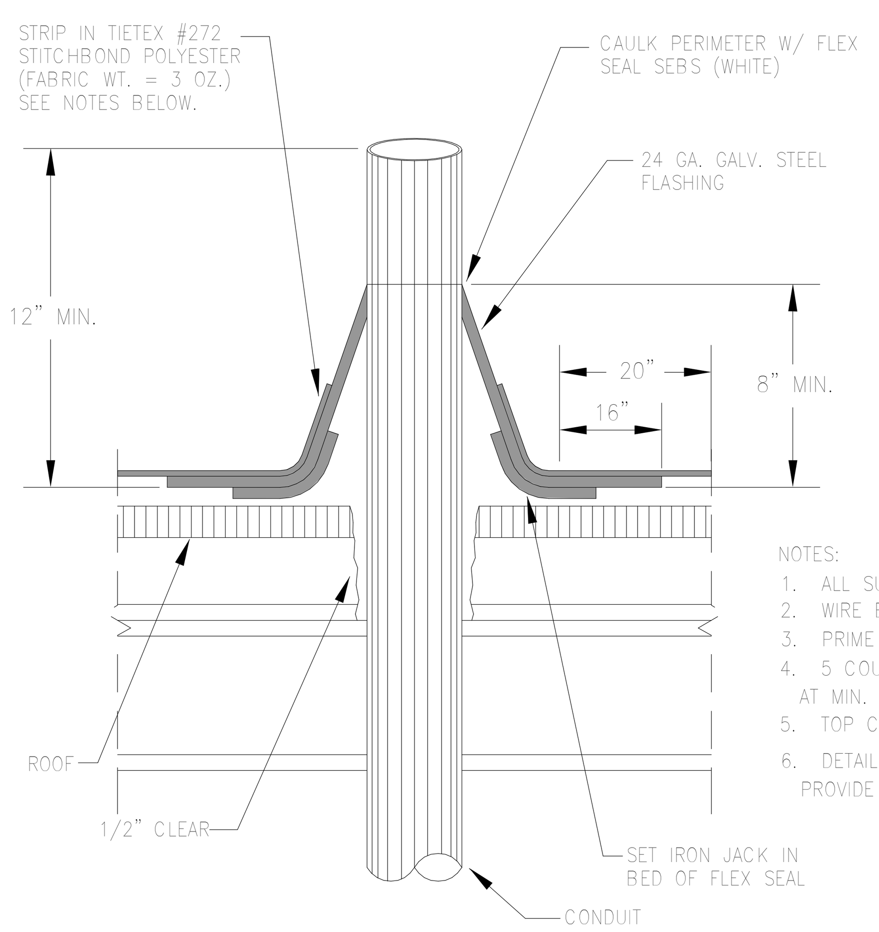

NOTES:
1. ALL SURFACES TO BE CLEAN (FREE OF DIRT, GREASE, SCALE, PAINT, ETC.)
2. WIRE BRUSH ALL LOOSE MATERIAL AS REQUIRED.
3. PRIME EXISTING ROOF AND FLASHING W/ SB ELASTOMERIC PRIMER.
4. 5 COURSE: 2 PLYS TIETEX W/ SB ELASTOMERIC GEL (FEATHER SECOND PLY) AT MIN. 40 MIL UNCURED PER COURSE.
5. TOP COAT W/ K-2 EXTREME DUTY ELASTOMER (MATCH ROOF COLOR)
6. DETAIL SHOW FOR WEATHERPROOFING PENETRATION ONLY. CONTRACTOR SHALL PROVIDE FIRESTOPPING AS REQUIRED TO MAINTAIN FIRE RATING OF ROOF.

5 NTS ROOF PENETRATION WEATHERPROOF DETAIL

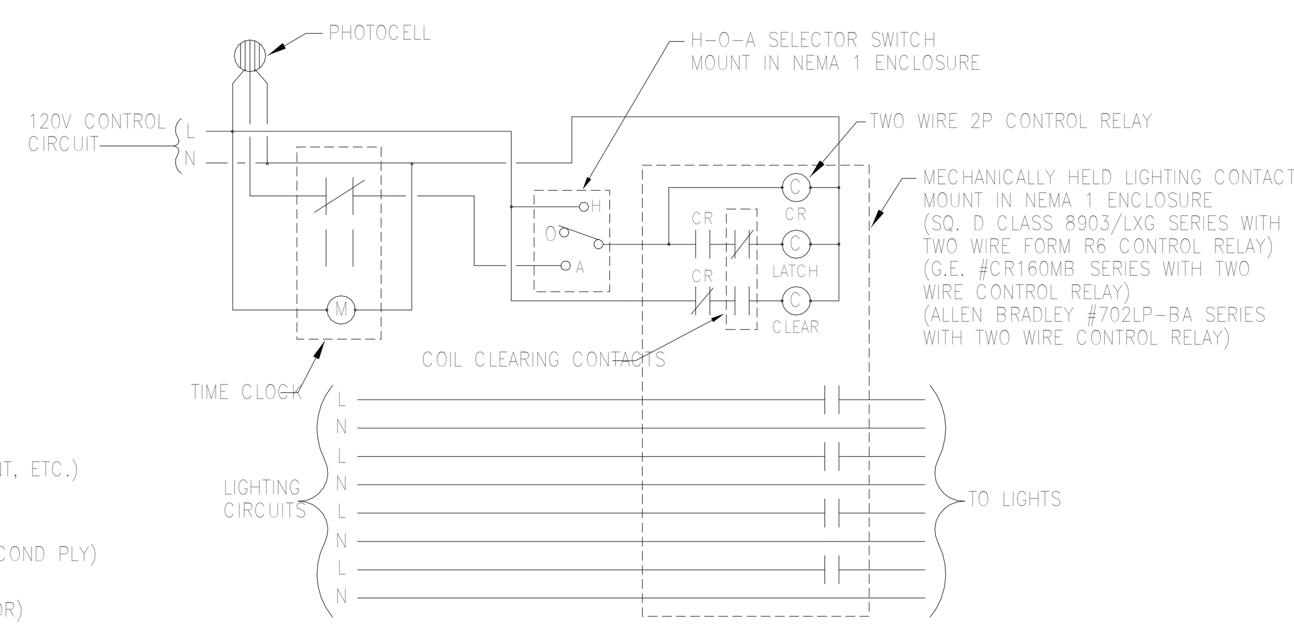

NOTE:
PROVIDE, INSTALL & CONNECT ADDITIONAL CONTACTS AND/OR CONTACTORS COMPLETE WITH ENCLOSURES AS REQUIRED PER APPLICATION, SEE ELECTRICAL DRAWINGS TO DETERMINE EXACT NUMBER OF POLES. SEE ELECTRICAL DRAWINGS FOR ACTUAL CIRCUIT NUMBERS. PROVIDE MINIMUM OF (2) ADDITIONAL/SPARE CONTACTS.

6 NTS CONTACTOR 'LC1' SCHEMATIC - PHOTOCELL & TIMECLOCK CONTROLLED

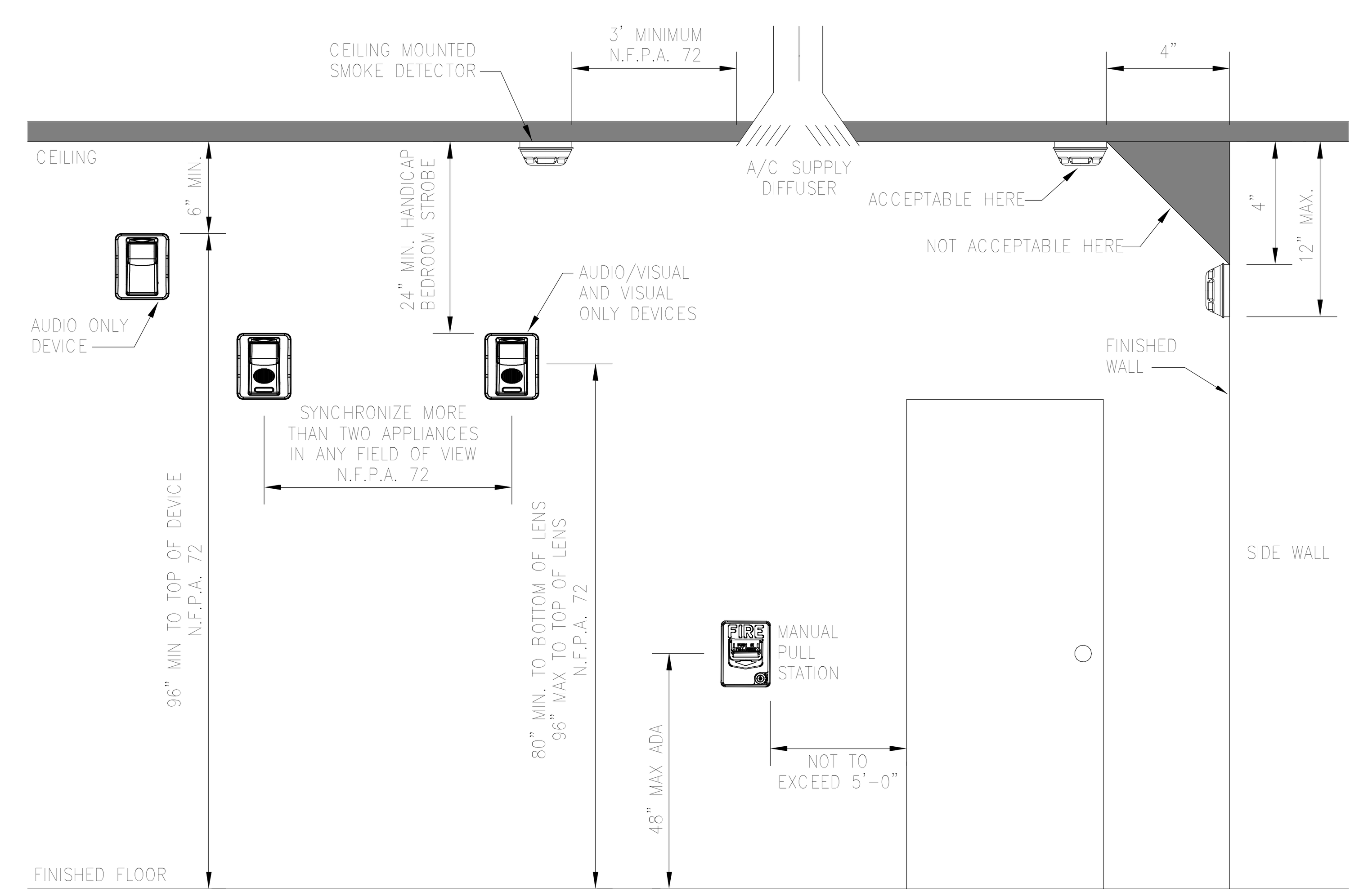

7 NTS STANDARD MOUNTING HEIGHT DETAIL

OLD MEMORIAL

13600 National Golf Dr
Tampa, FL 33626

no.	description	date
	PERMIT SET	04.24.26

E7.01

ELECTRICAL DETAILS

sheet size 24" x 36"

Reviewed for Code Compliance
With The Florida Building Code
ECS, Florida LLC
41-5640-BLD2 7/20/2026

Electrical Review - Roger Sanders PX651 - Reviewed - 7/14/2026
Mechanical Review - Roger Sanders PX651 - Reviewed - 7/14/2026
Plumbing Review - Roger Sanders PX651 - Reviewed - 7/14/2026
Fire Review - Jay Traina - NA to Private Provider - 7/16/2026
Building Review - Roger Sanders PX651 - Reviewed - 7/14/2026

ELECTRICAL SPECIFICATIONS

I. GENERAL REQUIREMENTS:

A. DO ALL WORK IN COMPLIANCE WITH THE LATEST ADOPTED EDITION OF THE FLORIDA BUILDING CODE (FBC-2023), NFPA 70 (NEC-2020) AND NFPA 101 (LIFE SAFETY CODE-2024), AND THE REGULATIONS OF THE LOCAL UTILITY TELEPHONE, CABLE TELEVISION AND POWER UTILITY COMPANIES. OBTAIN AND PAY FOR ANY AND ALL REQUIRED PERMITS, INSPECTIONS, CERTIFICATES OF INSPECTIONS AND APPROVAL, AND THE LIKE, AND DELIVER SUCH CERTIFICATES TO THE ENGINEER.

B. THE CONTRACTOR SHALL FURNISH, PERFORM, OR OTHERWISE PROVIDE ALL LABOR (INCLUDING, BUT NOT LIMITED TO, ALL PLANNING, PURCHASING, PAINTING, TRANSPORTING, RIGGING, HOISTING, STORING, INSTALLING, TESTING, CHASING, CHANNELING, CUTTING, TRENCHING, EXCAVATING AND BACKFILLING), COORDINATION, FIELD VERIFICATION, EQUIPMENT INSTALLATION, SUPPORT, AND SAFETY, SUPPLIES, AND MATERIALS NECESSARY FOR THE CORRECT INSTALLATION OF COMPLETE AND FUNCTIONAL ELECTRICAL SYSTEMS (AS DESCRIBED OR IMPLIED BY THESE SPECIFICATIONS AND THE APPLICABLE DRAWINGS).

C. ALL DRAWINGS AND SPECIFICATIONS ON THE PROJECT ARE COMPLEMENTARY, EACH TO ALL OTHER SETS, AND THEY SHALL BE USED IN COMBINATION FOR THE EXECUTION OF THIS WORK. DIVISION 16 WORK SHOWN ON ANY ONE SET OF DRAWINGS, INCLUDING ALL ARCHITECTURAL DRAWINGS, MECHANICAL, PLUMBING AND FIRE PROTECTION DRAWINGS FOR GENERAL WORK AND EQUIPMENT, AND DIVISION 16 WORK CALLED FOR UNDER ANY SECTION OF THE PROJECT SPECIFICATIONS, SHALL BE CONSIDERED AS INCLUDED IN THIS WORK UNLESS SPECIFICALLY EXCLUDED BY INCLUSION IN SOME OTHER BRANCH OF THE WORK. THIS SHALL INCLUDE ROUGHING-IN FOR CONNECTIONS AND EQUIPMENT AS CALLED FOR OR INFERRED. THE CONTRACTOR SHALL CHECK ALL DRAWINGS AND SPECIFICATIONS FOR THE PROJECT AND SHALL BE RESPONSIBLE FOR THE INSTALLATION OF ALL DIVISION 16 WORK.

D. THE CONTRACTOR SHALL CAREFULLY CHECK THE DRAWINGS AND SPECIFICATIONS OF ALL OTHER TRADES AND DIVISIONS BEFORE INSTALLING ANY OF HIS WORK. HE SHALL IN ALL CASES CONSIDER THE WORK OF ALL OTHER TRADES, AND SHALL COORDINATE HIS WORK WITH THEM SO THAT THE BEST ARRANGEMENTS OF ALL EQUIPMENT, PIPING, CONDUIT, DUCTS, ROUGH-IN, ETC., CAN BE OBTAINED.

E. LOCATIONS DESIGNATED FOR OUTLETS, SWITCHES, DEVICES, EQUIPMENT, ETC., ARE APPROXIMATE AND FINAL LOCATIONS SHALL BE VERIFIED IN THE FIELD. CONTRACTOR SHALL LOCATE ALL DEVICES UP TO 5 FEET IN ANY DIRECTION AS DIRECTED BY OWNER AND PER CODE. WHERE INSTRUCTIONS OR NOTES ARE INSUFFICIENT TO CONVEY THE INTENT OF THE DESIGN, CONSULT THE OWNER PRIOR TO BIDDING AND INSTALLATION.

F. CONTRACTOR SHALL BE RESPONSIBLE FOR VERIFYING AND COORDINATING THE LOCATIONS OF DEVICES TO BE USED AND COORDINATING THE FINAL LOCATIONS OF ELECTRICAL EQUIPMENT WITH MILLWORK, SINKS, BENCHES, COUNTERS AND SHELVING PRIOR TO BIDDING AND INSTALLATION. ALL DISCREPANCIES SHALL BE BROUGHT TO THE ATTENTION OF THE OWNER.

G. DIVISION 16 CONTRACTOR SHALL HAVE HAD EXPERIENCE OF AT LEAST THE SAME SIZE AND SCOPE AS THIS PROJECT, ON AT LEAST TWO OTHER PROJECTS WITHIN THE LAST FIVE YEARS IN ORDER TO BE QUALIFIED TO BID THIS PROJECT.

H. CONTRACTOR SHALL AND DOES HEREBY WARRANT ALL MATERIALS AND EQUIPMENT FURNISHED UNDER THIS SECTION OF THE SPECIFICATIONS TO BE FREE FROM DEFECTS AND TO FUNCTION OR OPERATE SATISFACTORILY FOR ONE YEAR AFTER FINAL ACCEPTANCE OF THE WORK, AND THAT ANY ITEMS NOT MEETING THIS REQUIREMENT WILL BE MADE GOOD BY HIM WITHOUT COST TO OWNER, PROVIDED SUCH DEFECTS OR FAILURES ARE NOT DUE TO ABUSE, NEGLECT, OR LACK OF REASONABLE AND ORDINARY MAINTENANCE.

I. ALL WORK SHALL BE EXECUTED IN A WORKMANSHIP MANNER DISPLAYING A NEAT MECHANICAL APPEARANCE UPON COMPLETION.

J. BALANCE TOTAL PHASE LOADS IN EACH ELECTRICAL PANEL TO A VALUE WITHIN 10% OF EACH OTHER.

K. THE CONTRACTOR SHALL PROVIDE ADEQUATE PROTECTION, WHEREVER WORK IS TO BE PERFORMED IN FINISHED/OCCUPIED SPACES, TO PREVENT DAMAGE TO ADJACENT AREAS, EQUIPMENT, OR FURNISHINGS; TO PREVENT ACCIDENTAL INJURY TO BUILDING OCCUPANTS AND THE PUBLIC; TO PREVENT THE SPREADING OF DUST, DIRT, DEBRIS, AND MOISTURE FROM THE AREA WHERE WORK IS BEING PERFORMED; AND TO PREVENT DUST, DIRT, DEBRIS, AND MOISTURE FROM GETTING ON OR IN THE BUILDING OCCUPANT'S FURNISHINGS OR EQUIPMENT.

L. THE CONTRACTOR SHALL REPAIR, AT NO COST TO THE OWNER, ANY DAMAGE DONE BY HIMSELF OR HIS EMPLOYEES. HE SHALL ALSO BE RESPONSIBLE FOR ALL CUTTING AND PATCHING REQUIRED TO PROPERLY INSTALL HIS WORK. THIS SHALL ALSO INCLUDE THE PATCHING OF EXISTING ROADWAYS (PAVED OR IMPROVED), PARKING AREAS, SIDEWALKS, WALLS, STAIRS, MECHANICAL WORK, CURBS, GUTTERS, ETC., CUT TO INSTALL WORK PROVIDED BY THE CONTRACTOR. PATCH WORK SHALL COMPLY WITH THE APPLICABLE SECTIONS OF THESE SPECIFICATIONS AND SHALL MATCH THE EXISTING FINISHES.

M. UPON COMPLETION OF WORK, THE ENTIRE WIRING SYSTEM SHALL BE TESTED, AND SHALL BE SHOWN TO BE IN PROPER WORKING CONDITION IN ACCORDANCE WITH INTENT OF SPECIFICATIONS AND DRAWINGS. IT SHALL BE THE RESPONSIBILITY OF THE CONTRACTOR TO HAVE ALL SYSTEMS READY FOR OPERATION AND TO HAVE AN ELECTRICIAN AVAILABLE TO OPERATE SAME IN ACCORDANCE WITH AND UNDER THE SUPERVISION OF THE INSPECTION REPRESENTATIVE OF THE ENGINEER. THE CONTRACTOR SHALL BE AVAILABLE TO ASSIST IN REMOVAL OF PANEL FRONTS, ETC., TO PERMIT INSPECTION AS REQUIRED.

N. IN ACCORDANCE WITH DIVISION 1 AND THE CONDITIONS OF THE CONTRACT, THE CONTRACTOR SHALL PROVIDE AND KEEP UP TO DATE A COMPLETE RECORD SET OF CONSTRUCTION "AS-BUILTS" BLUELINE PRINTS WHICH SHALL BE CORRECTED DAILY, AND SHALL SHOW EVERY CHANGE FROM THE ORIGINAL CONTRACT DRAWINGS, INCLUDING ADDENDA AND CHANGE ORDERS IN ACCORDANCE WITH GENERAL REQUIREMENTS AND SPECIAL CONDITIONS. THIS SET OF PRINTS SHALL BE KEPT ON THE JOB SITE, AND SHALL BE USED ONLY AS A RECORD SET. THIS SHALL NOT BE CONSTRUED AS AUTHORIZATION FOR THE CONTRACTORS TO MAKE CHANGES IN THE LAYOUT WITHOUT DEFINITE INSTRUCTION IN EACH CASE.

II. ELECTRICAL SCOPE:

A. FURNISHING AND INSTALLATION OF POWER SYSTEMS, AND AUXILIARY SYSTEMS AS SHOWN OR HEREIN SPECIFIED.

B. CONNECTION OF ALL EQUIPMENT REQUIRING ELECTRICAL CONNECTION, MENTIONED IN THIS DIVISION OR SHOWN ON DRAWINGS, WHETHER FURNISHED BY DIVISION 16 OR UNDER OTHER DIVISIONS, OR FURNISHED BY OWNER.

C. FURNISHING AND INSTALLATION OF OUTLET BOXES, CONDUIT RACEWAYS, FOR A TELEPHONE AND DATA RACEWAY DISTRIBUTION SYSTEM. (TELEPHONE AND DATA HARDWARE, AS WELL AS WIRING AND SOFTWARE IS NOT INCLUDED.)

D. THE CONTRACTOR SHALL BE FULLY RESPONSIBLE FOR CONTACTING THE OFFICES OF ALL LOCAL AND/OR STATE AUTHORITIES HAVING JURISDICTION OVER THIS PROJECT IN ORDER TO SCHEDULE ALL REQUIRED INSPECTIONS AND OBTAIN ALL NECESSARY PERMITS, ETC. THE CONTRACTOR SHALL NOTIFY THE ARCHITECT/ENGINEER OF ALL SCHEDULED INSPECTIONS AT LEAST TWO WEEKS IN ADVANCE OF THE SCHEDULED DATE.

E. THE CONTRACTOR SHALL REPLACE ANY DEFECTIVE MATERIALS, EQUIPMENT, OR WORKMANSHIP WITHOUT COST TO THE OWNER WITHIN THE STIPULATED GUARANTEED PERIOD.

F. IT SHALL BE THE RESPONSIBILITY OF THE DIVISION 16 CONTRACTOR TO HAVE ALL SYSTEMS READY FOR OPERATION AND TO HAVE AN ELECTRICIAN AVAILABLE FOR ALL INSPECTIONS. THE CONTRACTOR SHALL PROVIDE PERSONNEL TO ASSIST IN REMOVAL OF PANEL FRONTS, ETC. TO PERMIT INSPECTION AS REQUIRED.

G. SUBMIT TO THE ARCHITECT/ENGINEER PROMPTLY AFTER AWARD OF CONTRACT AND PRIOR TO PURCHASING, SIX COPIES OF MANUFACTURER'S SHOP DRAWINGS IN ACCORDANCE WITH DIVISION 1, SECTION 01300 – SUBMITTALS FOR THE FOLLOWING ITEMS. ALL SHOP DRAWINGS OF A SPECIFIC ITEM OR SYSTEM SHALL BE MADE IN ONE SUBMITTAL AND WITHIN TEN DAYS AFTER AWARD OF CONTRACT.

1. PANELBOARDS
2. SUPPORTS
3. WIRING DEVICES
4. DISCONNECT SWITCHES
5. CONDUIT
6. WIRE

H. COMPLETED WIRING SYSTEMS SHALL BE FREE FROM SHORT CIRCUITS AND AFTER COMPLETION, PERFORM TESTS FOR INSULATION RESISTANCE IN ACCORDANCE WITH THE REQUIREMENTS OF THE NATIONAL ELECTRICAL CODE. ALL WIRING SYSTEMS SHALL BE COMPLETELY AND TOTALLY "SAFED" DURING CONSTRUCTION. ONLY QUALIFIED PERSONNEL SHALL HANDLE ELECTRICAL SYSTEMS.

I. BEFORE ROUGH-IN OF CIRCUITRY OR CONNECTING TO EQUIPMENT, FURNISHED UNDER THIS DIVISION, ANY OTHER DIVISION, OR BY THE OWNER, THE CONTRACTOR SHALL VERIFY THE ELECTRICAL CHARACTERISTICS AND REQUIREMENTS OF THE EQUIPMENT BEING FURNISHED AND FOR THAT SPECIFIED AND SHOWN ON THE DRAWINGS AND PROVIDE FOR PROPER ROUGH-IN AND CONNECTION.

J. THE ELECTRICAL CIRCUITS, COMPONENTS, AND CONTROLS FOR ALL EQUIPMENT ARE SELECTED AND SIZED, BASED ON THE EQUIPMENT SPECIFIED. IF SUBSTITUTIONS AND/OR EQUIVALENT EQUIPMENT ARE FURNISHED, IT SHALL BE THE RESPONSIBILITY OF ALL PARTIES CONCERNED, INVOLVED IN, AND FURNISHING THE SUBSTITUTE AND/OR EQUIVALENT EQUIPMENT TO VERIFY AND COMPARE THE ELECTRICAL CHARACTERISTICS AND REQUIREMENTS OF THAT FURNISHED TO THAT SPECIFIED AND/OR SHOWN. IF GREATER CAPACITY OR MORE MATERIALS OR LABOR IS REQUIRED FOR THE ROUGH-IN, CIRCUITRY OR CONNECTIONS THAN FOR THE ITEM SPECIFIED AND PROVIDED FOR, THEN IT SHALL BE THE RESPONSIBILITY OF THE PARTIES INVOLVED IN PROVIDING THE SUBSTITUTE AND/OR EQUIVALENT ITEMS OF EQUIPMENT TO PROVIDE ALL COMPENSATION FOR ADDITIONAL CHARGES MADE FOR THE PROPER ROUGH-IN, CIRCUITRY AND CONNECTIONS FOR THE EQUIPMENT FURNISHED. NO ADDITIONAL CHARGES ABOVE THE BASE BID SHALL BE ALLOWED FOR SUCH REVISIONS.

K. EXCAVATION FOR UNDERGROUND ELECTRICAL STRUCTURES: CONFORM TO ELEVATIONS AND DIMENSIONS SHOWN WITHIN A TOLERANCE OF PLUS OR MINUS 0.10'; PLUS A SUFFICIENT DISTANCE TO PERMIT PLACING AND REMOVAL OF CONCRETE FORMWORK, INSTALLATION OF SERVICES, OTHER CONSTRUCTION, AND FOR INSPECTION.

L. TRENCHING: EXCAVATE TRENCHES FOR ELECTRICAL INSTALLATIONS AS FOLLOWS:

1. EXCAVATE TRENCHES TO THE UNIFORM WIDTH, SUFFICIENTLY WIDE TO PROVIDE AMPLE WORKING ROOM AND A MINIMUM OF 6" TO 9" CLEARANCE ON BOTH SIDES OF RACEWAYS AND EQUIPMENT.
2. EXCAVATE TRENCHES TO DEPTH INDICATED OR REQUIRED.
3. LIMIT THE LENGTH OF OPEN TRENCH TO THAT IN WHICH INSTALLATIONS CAN BE MADE AND THE TRENCH BACKFILLED WITHIN THE SAME DAY.
4. WHERE ROCK IS ENCOUNTERED, CARRY EXCAVATION BELOW REQUIRED ELEVATION AND BACKFILL WITH A LAYER OF CRUSHED STONE OR GRAVEL PRIOR TO INSTALLATION OF RACEWAYS AND EQUIPMENT. PROVIDE A MINIMUM OF 6" OF STONE OR GRAVEL CUSHION BETWEEN ROCK BEARING SURFACE AND ELECTRICAL INSTALLATIONS.

M. THE CONTRACTOR SHALL PROVIDE ALL INSERTS FOR THE SUPPORT OF DIVISION 16 EQUIPMENT TO BE PLACED IN CONCRETE OR THROUGH CONCRETE SLABS AS CONSTRUCTION PROGRESSES. HE SHALL PROVIDE ALL MISCELLANEOUS HANGING AND SUPPORTING HARDWARE. ALL ELECTRICAL WORK IS TO BE CONCEALED IN OR BUILT INTO GENERAL CONSTRUCTION SHALL BE PLACED AS CONSTRUCTION PROGRESSES. FAILURE OF THE CONTRACTOR TO COORDINATE WORK WITH OTHER TRADES AND THE PROJECT CONSTRUCTION PROGRESS SHALL MAKE HIM RESPONSIBLE FOR ALL COST OF CUTTING AND PATCHING, AS REQUIRED TO INSTALL WORK. NO STRUCTURAL MEMBER, MASONRY CONSTRUCTION OR FINISHED WORK SHALL BE CUT OR ALTERED WITHOUT PRIOR WRITTEN APPROVAL BY THE ARCHITECT/ENGINEER. CONTRACTOR SHALL FIRE RATE ALL PENETRATIONS THROUGH ALL FIRE RATED SLABS OR WALLS PER THE INTENDED RATING.

N. THE CONTRACTOR SHALL SUPPLY AND SET INTO PLACE ALL WALL SLEEVES FOR CONDUITS AND CEILING INSERTS FOR HANGERS IN AREAS OF NEW CONSTRUCTION AS BUILDING CONSTRUCTION PROGRESSES. INSTALL EQUIPMENT NOTED TO BE CONCEALED IN WALLS BEFORE WALLS ARE CONSTRUCTED IN ORDER THAT WALLS MAY BE CONSTRUCTED AROUND CONDUITS, ENCLOSURES, ETC.

O. METALLIC MATERIALS SHALL BE PROTECTED AGAINST CORROSION. EQUIPMENT ENCLOSURES SHALL BE GIVEN RUST-INHIBITING TREATMENT AND STANDARD FINISH BY MANUFACTURER. ALUMINUM SHALL NOT BE USED ON CONTACT WITH EARTH, AND, WHERE CONNECTED TO DISSIMILAR METAL, SHALL BE PROTECTED BY SUITABLE FITTINGS AND TREATMENT. ALL FERROUS METALS SUCH AS ANCHORS, BOLTS, BRACES, BOXES, BODIES, CLAMPS, FITTINGS, GUARDS, NUTS, PINS, RODS, SHIMS, THIMBLES, WASHERS, AND MISCELLANEOUS PARTS, NOT OF STAINLESS STEEL OR NONFERROUS MATERIALS, SHALL BE HOT-DIPPED GALVANIZED.

P. ALL CONDUITS STUBBED OUT FOR FUTURE USE SHALL HAVE A PULL WIRE INSTALLED, A PLASTIC CAP INSTALLED AND BE IDENTIFIED AS TO THE CONDUIT ORIGIN.

Q. THE RESPONSIBILITY FOR ANY CUTTING OF CONSTRUCTION WHICH IS REQUIRED FOR THE INSTALLATION OF DIVISION 16 WORK, SHALL BE BY THE CONTRACTOR. THE CONTRACTOR SHALL COORDINATE WITH ALL OTHER TRADES AND THE OWNER BEFORE ANY CUTTING AND OBTAIN APPROVAL FROM THE ARCHITECT/ENGINEER PRIOR TO ANY CUTTING. ALL PATCHING AND FINISHING SHALL BE BY THE CONTRACTOR.

R. WHERE OPENINGS OR HOLES ARE CUT IN CONSTRUCTION AND THE CUTTING BREAKS ELECTRICAL CIRCUITRY OR CONTROL CIRCUITRY CONDUIT AND WIRING, THEN IT SHALL BE THE RESPONSIBILITY OF THE CONTRACTOR TO REROUTE THE CIRCUITRY CONDUIT AND REWIRING AND TO COMPLETE THE CIRCUITRY AS REQUIRED AND AS APPROVED BY THE ARCHITECT/ENGINEER. TEMPORARY COMPLETION SHALL BE PROVIDED WHERE NECESSARY BEFORE THE PERMANENT REROUTING AND COMPLETION WORK IS FINISHED.

S. ANY PENETRATIONS OF FIRE OR SMOKE RATED ASSEMBLIES MADE BY THIS CONTRACTOR IN VERTICAL OR HORIZONTAL CONSTRUCTION SHALL BE SEALED AND PROTECTED BY THIS CONTRACTOR IN ORDER TO MAINTAIN THE ESTABLISHED FIRE RATING WITH METHODS AS APPROVED BY THE AUTHORITY HAVING JURISDICTION.

III. IDENTIFICATION:

A. IDENTIFICATION NAMEPLATES SHALL BE LAMINATED PLASTIC, SECURED TO EQUIPMENT WITH TWO SCREWS.

B. EACH PANELBOARD AND SWITCHBOARD SHALL BE EQUIPPED WITH A PERMANENT PLASTIC NAMEPLATE WITH 1/2" MINIMUM LETTERS, SECURELY FASTENED TO THE DEVICE.

C. EACH INDIVIDUALLY MOUNTED CIRCUIT BREAKER, SWITCH, TRANSFER SWITCH, MOTOR STARTER, LIGHTING CONTACTOR, TRANSFORMER AND/OR ANY OTHER CONTROL OR PROTECTIVE DEVICE INCLUDING EQUIPMENT DISCONNECT SWITCHES SHALL BE EQUIPPED WITH A PERMANENT PLASTIC NAMEPLATE WITH 1/2" MINIMUM LETTERS.

D. PANELBOARDS SHALL HAVE TYPEWRITTEN DIRECTORIES. ALL CIRCUITS TO BE IDENTIFIED BY DEVICES SERVED AND ROOM NUMBERS (I.E., LIGHTING ROOM 216). HANDWRITTEN DIRECTORIES WILL NOT BE ALLOWED.

E. EACH JUNCTION BOX CABINET OR WIREWAY LARGER THAN 6" X 6" SHALL BE EQUIPPED WITH A
PLASTIC NAMEPLATE WITH 1/2" MINIMUM LETTERS INDICATING THE SYSTEM ENCLOSED.

F. ALL SYSTEMS JUNCTION BOXES AND CONDUIT SHALL BE COLOR CODED INSIDE AND OUTSIDE OF THE BOX PRIOR TO THE INSTALLATION OF CONDUCTORS PER THE FOLLOWING:

1. CCTV SYSTEM: GREEN
2. TELEPHONE DATA SYSTEM: BLUE
3. FIRE ALARM SYSTEM: RED

G. ENTIRE BOX INSIDE AND OUT, INCLUDING COVER, SHALL BE PAINTED PRIOR TO INSTALLING CONDUCTORS.

IV. WIRING DEVICES:

A. SWITCHES AND RECEPTACLES IN LOBBIES, CORRIDORS OR COMMERCIAL SPACES, UNFINISHED AND MECHANICAL SPACES SHALL BE 20 AMP COMMERCIAL GRADE 125 VAC. GRAY IN COLOR WITH STAINLESS STEEL COVERPLATES.

B. WEATHERPROOF RECEPTACLES SHALL BE GFCI TYPES WITH GASKETED STAINLESS STEEL KEY LOCKABLE FLIP COVER TYPE COVERPLATES. SURGE SUPPRESSION TYPE OUTLETS IN MDFS AND IDFS SHALL BE HUBBELL #83625 (BLUE) OR EQUAL.

C. RECEPTACLES PROVIDED FOR ATTACHMENT OF CORD AND PLUG EQUIPMENT SHALL BE HEAVY DUTY, SPECIFICATION GRADE, NON-INTERCHANGEABLE, FLUSH MOUNTED TYPES OF THE PROPER NEMA CONFIGURATION TO SERVE THE EQUIPMENT. NEMA CONFIGURATIONS SHALL BE VERIFIED PRIOR TO INSTALLATION OF CIRCUIT CONDUCTORS. CONTRACTOR TO PROVIDE ALL CONNECTION, WIRING, PIGTAILS FOR DISHWASHERS, COOKING RANGES, OVENS AND GARBAGE DISPOSALS.

D. ALL DEVICES SHALL HAVE PROPER PLATES, CARPET FLANGES, TRIMS, RINGS, ESCUTCHEONS, ETC., AS MANUFACTURED BY SAME MANUFACTURER AS DEVICES. ANY TELEPHONE OR OTHER OUTLET WHICH IS NOT EQUIPPED WITH A PLATE FURNISHED BY OTHERS SHALL HAVE ONE PROVIDED BY THIS CONTRACTOR. DEVICE PLATES SHALL BE COLOR AND TYPE AS SHOWN BELOW.

1. FINISHED SPACES DECORA LINE:
   a. COORDINATE EXACT COLOR WITH OWNER/ARCHITECT.
2. UNFINISHED OR INDUSTRIAL OR COMMERCIAL TYPE SPACES:
   a. GRAY DEVICES
   b. STAINLESS STEEL OR STAMPED GALVANIZED STEEL ON SURFACE MOUNTED BOXES
   c. STAINLESS STEEL PLATES ON FLUSH MOUNTED BOXES

F. MOUNTING HEIGHTS ARE APPROXIMATE. THE EXACT LOCATIONS AND MOUNTING HEIGHTS SHALL BE DETERMINED ON THE JOB AND IT SHALL BE THE CONTRACTOR'S RESPONSIBILITY TO COORDINATE WITH ALL TRADES TO INSURE CORRECT INSTALLATION, I.E., OVER COUNTERS IN OR ABOVE BACK-SPLASHES, IN BLOCK WALLS, TILE, AND OTHER SPECIFIC CONSTRUCTION FEATURES. LOCATION OF OUTLETS MOUNTED IN BUILT-INS, MILLWORK, AND CABINETRY SHALL BE VERIFIED. OUTLETS MOUNTED IN KICK OR TOE SPACES SHALL BE MOUNTED HORIZONTALLY. OUTLET BOXES SHALL BE MOUNTED TO PREVENT DEVICE PLATE FROM OVERLAPPING BACKSPLASH, TRIM, TILE, ETC. LOCATE SO DEVICE PLATE WILL LAY FLAT AGAINST SURFACE COMPLETELY AROUND THE PERIMETER OF PLATE.

G. OUTLETS, OTHER THAN THOSE COORDINATED WITH COUNTER TOPS, SHELVES, AND CABINETS, SHALL BE LOCATED WITH THE CENTER LINE OF OUTLET BOXES THE FOLLOWING DISTANCE ABOVE THE FINISHED FLOOR, UNLESS OTHERWISE INDICATED:

1. RECEPTACLES, GENERAL: 1'-6" AFF
2. TELEPHONE OUTLETS: 1'-6" AFF
3. SWITCHES, GENERAL: 4'-0" AFF

V. RACEWAYS

A. SHALL BE GALVANIZED OUTSIDE AND INSIDE BY HOT DIPPING. E.M.T. SHALL BE ELECTRO-GALVANIZED. CONDUITS SHALL BE AS MANUFACTURED BY REPUBLIC, PITTSBURGH STANDARD, WHEATLAND, TRIANGLE, ALLIED, OR YOUNGSTOWN.

B. SHALL BE STANDARD THREADED TYPE, GALVANIZED OUTSIDE AND INSIDE BY HOT DIPPING. THREADLESS AND CLAMP TYPE NOT ACCEPTABLE. SHALL BE AS MANUFACTURED BY RACO, EFCOR, OR APPLETON.

C. SHALL BE STEEL THREADED COMPRESSION TYPE. ALL COUPLINGS AND CONNECTORS SHALL BE EFCOR OR RACO. PRESSURE INDENTED TYPE CONNECTORS OR CAST METAL WILL NOT BE APPROVED FOR ANY LOCATION.

D. CONNECTORS SHALL HAVE PLASTIC INSULATED THROAT INSERTS.

E. THE USE OF METAL CLAD CABLE IS ACCEPTABLE IN LOCATIONS AS ACCEPTED BY THE NEC AND ALL LOCAL JURISDICTIONAL CODES.

F. STEEL METAL CLAD CABLE, TYPE MC, EMPLOYING CIRCUIT CONDUCTORS #12 SOLID TO #2 AWG, SOLID OR STRANDED COPPER WITH THHN INSULATION, AN INSULATED GREEN GROUNDING CONDUCTOR AND GALVANIZED STEEL INTERLOCKED ARMOR CLADDING. THE CABLES SHALL BE SUITABLE FOR USE IN DRY LOCATIONS AT TEMPERATURES NOT EXCEEDING 90° C ON AD CIRCUITS UP TO 600 VOLTS IN ACCORDANCE WITH N.E.C., ARTICLE 330. THE CABLE SHALL BE ONE AND TWO HOUR FIRE RATED PER ANSI/UL 1479 FOR USE IN WALL, CEILING AND FLOOR ASSEMBLIES.

G. FLEXIBLE METALLIC CONDUIT RACEWAYS MAY BE USED TO CONNECT HVAC UNITS LOCATED IN INTERIOR MECHANICAL AREAS. MINIMUM SIZE 3/4".

H. CONDUIT SHALL BE SIZED IN ACCORDANCE WITH THE LATEST NATIONAL ELECTRICAL CODE EXCEPT THAT NO CONDUIT SHALL BE SMALLER THAN 3/4" UNLESS OTHERWISE NOTED. CONDUIT SHALL BE SIZED LARGER THAN REQUIRED ABOVE WHEN SO SHOWN ON THE DRAWINGS OR WHEN REQUIRED BY LOCAL CODE.

I. ANY CONDUIT STUBBED OUT FOR FUTURE SHALL BE CAPPED WITH A PLASTIC CAP AND MARKED WITH A 2" MINIMUM RED METAL TAG WHICH IDENTIFIES CONDUIT ORIGIN. CONDUITS STUBBED UP ABOVE GRADE OR ROOF SHALL BE TAGGED ON THE CONDUIT. CONDUIT STUBBED OUT BELOW GRADE SHALL BE TAGGED ON NEAREST BUILDING WALL, CURB, ETC., DIRECTLY OVER THE CONDUIT RUN. ALL EMPTY CONDUITS SHALL HAVE PULL WIRES.

VI. SCHEDULE 40 RIGID PVC:

A. CONDUIT SHALL BE COMPOSED OF POLYVINYLCHLORIDE AND SHALL BE UL RATED TYPE 40 FOR USE WITH 90EC RATED CONDUCTORS. CONDUIT SHALL CONFORM TO NEMA STANDARDS AND APPLICABLE SECTIONS OF NEC.

B. INSTALLATION OF RIGID NON-METALLIC CONDUIT SHALL COMPLY WITH ARTICLE 352 OF THE NATIONAL ELECTRICAL CODE (NFPA 70) AND THESE SPECIFICATIONS.

C. PROVIDE A CONTINUOUS, INSULATED, GROUNDING CONDUCTOR IN EVERY RIGID, NON-METALLIC RACEWAY EVEN IF NOT SHOWN ON THE DRAWINGS. THE GROUNDING CONDUCTOR SHALL BE CONNECTED TO GROUND AT EACH END OF THE RACEWAY IN ACCORDANCE WITH ARTICLE 250 OF THE NATIONAL ELECTRICAL CODE (NFPA 70).

D. WHERE RIGID NON-METALLIC CONDUIT TRANSITIONS TO METALLIC CONDUIT, THE LOCATION OF THE TRANSITION SHALL BE UNDERGROUND.

E. NO PVC CONDUIT SHALL BE RUN EXPOSED, OR ABOVE GRADE.

VII. WIRE AND CABLE 600 VOLT:

A. CONDUCTORS SHALL HAVE CURRENT CARRYING CAPACITIES AS PER NEC AND WITH 600 VOLT INSULATION, #12 AVERAGE MINIMUM FOR 20 AMP CIRCUITS AND #14 FOR 15 AMP CIRCUITS EXCEPT FOR CONTROLS, AND FIXTURE WIRE. CONDUCTORS SHALL BE COPPER.

B. #12 AND #10 SHALL BE SOLID, TYPE THW/THWN INSULATION.

C. #8 AND LARGER, AND ANY SIZE TO MOTORS SHALL BE STRANDED TYPE THW.

D. SHALL BE MADE WITH T & B STA-KON WIRE JOINTS, PT SERIES, COMPLETE WITH INSULATING CAPS AND INSTALLED WITH WT161 TOOL OR WT2000 TOOL, IDEAL SUPER-NUTS (NOT WIRE NUTS), IDEAL WING NUTS, OR BUCHANAN ELEC. PRODUCTS B CAP OR SERIES 2000 PRES-SURE CONNECTORS COMPLETE WITH NYLON SNAP-ON INSULATORS AND INSTALLED WITH C24 PRESSURE TOOL.

E. ALL JOINTS AND SPLICES IN WIRE SHALL BE MADE WITH APPROVED SOLDERLESS CONNECTORS, AND COVERED SO THAT INSULATION IS OWNER APPROVED EQUAL TO CONDUCTOR INSULATION. SPLICES SHALL NOT BE PERMITTED IN CONTROL, SECURITY, FIRE ALARM, TELEVISION OR COMMUNICATIONS SYSTEMS, OR WHERE OTHERWISE NOTED. SPLICING OF WIRE OR CABLES WILL NOT BE ALLOWED BELOW GRADE, INCLUDING IN BOXES BELOW GRADE.

F. BOTH CONDUCTORS AND CONDUITS SHALL BE CONTINUOUS FROM OUTLET TO OUTLET.

G. IN INSTALLING THE MAIN ELECTRICAL SERVICE, ADDITIONAL SLACK CONDUCTORS SHALL BE PROVIDED AND TERMINATED AS REQUIRED BY ELECTRIC UTILITY FOR CONNECTION TO THEIR EQUIPMENT. FIELD COORDINATE WITH UTILITY PRIOR TO INSTALLING CONDUCTORS.

H. IN INSTALLING PARALLEL CONDUCTORS IT IS MANDATORY THAT ALL CONDUCTORS MAKING UP THE FEEDER BE EXACTLY THE SAME LENGTH, THE SAME SIZE AND THE SAME TYPE OF CONDUCTOR WITH THE SAME INSULATION. FURTHER, EACH GROUP OF CONDUCTORS MAKING UP A PHASE OR NEUTRAL MUST BE BONDED AT BOTH ENDS IN AN APPROVED MANNER.

I. CONDUCTOR SIZES INDICATED ON CIRCUIT HOMERUNS OR IN PANELBOARD SCHEDULES SHALL BE INSTALLED OVER THE ENTIRE LENGTH OF THE CIRCUIT UNLESS NOTED OTHERWISE ON THE DRAWINGS.

J. CONDUCTORS SHALL BE CONTINUOUS AND UNSPLICED WHERE INSTALLED IN CONDUIT. SPLICES SHALL OCCUR ONLY WITHIN WIRING TROUGHS, WIREWAYS, JUNCTION BOXES, OUTLET BOXES, OR EQUIPMENT ENCLOSURES WHERE SUFFICIENT ADDITIONAL ROOM IS PROVIDED FOR ALL SPLICES.

K. EACH BRANCH CIRCUIT AND FEEDER CONDUCTOR SHALL BE COLOR CODED. FOR CONDUCTOR SIZES THRU NO. 6 AWG, THE INSULATION SHALL BE OF THE COLOR AS INDICATED BELOW. COLOR CODE SHALL BE STRICTLY ADHERED TO. FOR CONDUCTOR SIZES NO. 4 AWG AND LARGER, COLOR CODED PHASE TAPE MAY BE APPLIED COMPLETELY AROUND THE CONDUCTOR INSULATION WITHIN 8" OF EACH END OF THE CONDUCTOR AND IN EACH PULL OR JUNCTION BOX OR WHENEVER CONDUCTORS ARE PHYSICALLY EXPOSED TO VIEW. GROUNDING CONDUCTORS AND GROUNDED CONDUCTORS SHALL HAVE INSULATION COLOR AS INDICATED FOR SIZES THROUGH #6 AWG.
120/208 V, 3PHASE,4W

PHASE A, COLOR: BLACK
PHASE B, COLOR: RED
PHASE C, COLOR: BLUE
NEUTRAL, COLOR: WHITE
GROUND, COLOR: GREEN

VIII. GROUNDING:

A. THIS SECTION DEALS WITH THE GROUNDING OF SERVICE EQUIPMENT, TRANSFORMERS, NON-CURRENT CARRYING CONDUCTIVE SURFACES OF EQUIPMENT, METAL BUILDING, STRUCTURES AND OTHER EQUIPMENT.

B. ALL GROUNDING CONNECTIONS SHALL BE INSTALLED IN ACCORDANCE WITH THE NATIONAL ELECTRICAL CODE AND ALL LOCAL CODES AND REQUIREMENTS. SUCH CODES SHALL BE CONSIDERED MINIMUM REQUIREMENTS AND THE INSTALLATION OF THE GROUNDING SYSTEM SHALL INSURE FREEDOM FROM DANGEROUS SHOCK EXPOSURE AND SHALL PROVIDE A LOW IMPEDANCE GROUND FAULT PATH TO PERMIT OPERATION OF OVERCURRENT AND GROUND FAULT PROTECTIVE DEVICES.

C. ALL SERVICE AND EQUIPMENT GROUNDING CONDUCTORS, AND BONDING JUMPERS SHALL BE INSULATED COPPER, TYPE THHN, THWN, OR THW CONDUCTORS (UNLESS NOTED OTHERWISE) AND SHALL BE SIZED IN ACCORDANCE WITH THE APPLICABLE PORTIONS OF ARTICLES 250 AND 517 OF THE NATIONAL ELECTRICAL CODE. GROUNDING CONDUCTORS #6 AWG AND SMALLER SHALL HAVE A GREEN COLOR INSULATION. ALL GROUNDING CONDUCTORS #4 AWG AND LARGER SHALL BE ADEQUATELY IDENTIFIED WITH A GREEN TRACER AND/OR GREEN COLORED TAPE AT EACH END OF THE GROUNDING CONDUCTOR AND AT EACH PULLBOX OR OTHER ACCESSIBLE LOCATION.

D. THE MAIN SERVICE GROUNDING ELECTRODE SYSTEM SHALL CONSIST OF THE FOLLOWING ITEMS BONDED TOGETHER BY THE GROUNDING ELECTRODE CONDUCTORS IN ACCORDANCE WITH NATIONAL ELECTRICAL CODE:

1. THE MAIN UNDERGROUND COLD WATER PIPE, IF METAL, NEC 250.104(A)
2. METAL FRAME OF BUILDING WHERE AVAILABLE, NEC 250.104(C)
3. CONCRETE ENCASED ELECTRODE, NEC 250.52(A)(3)
4. THE BUILDING LIGHTNING PROTECTION SYSTEM, NEC 250.106.

E. THE NEUTRAL CONDUCTOR SHALL BE GROUNDED AT THE SERVICE ENTRANCE MAIN DISCONNECT, AND AT EACH SEPARATELY DERIVED SYSTEM ONLY PER NEC ARTICLE 250.

F. A #6 (MINIMUM) INSULATED COPPER CONDUCTOR INSTALLED IN 3/4" CONCEALED CONDUIT SHALL BE CONNECTED FROM THE BUILDING GROUNDING ELECTRODE SYSTEM TO EACH BUILDING TELEPHONE TERMINAL/DATA IDF TERMINAL BOARDS, OR CABINETS, FIRE ALARM CONTROL CABINETS, CCTV SYSTEM CABINETS, EMS CABINETS, AND SECURITY SYSTEM CABINETS. TERMINATE ON AN APPROPRIATELY SIZED (8) TERMINAL MULTI-CONDUCTOR CONNECTION GROUNDING LUG LOCATED WITHIN CABINET OR ON TERMINAL BOARDS.

IX. PANELBOARDS:

A. PANELBOARDS SHALL BE DEAD FRONT TYPE AND SHALL BE IN ACCORDANCE WITH UNDERWRITERS' LABORATORIES, INC., STANDARD FOR PANELBOARDS AND ENCLOSING CABINETS AND SO LABELED.

B. PANELBOARDS SHALL BE FACTORY ASSEMBLED WITH BRANCH BREAKERS ARRANGED AS SHOWN IN SCHEDULES. BREAKERS SHALL BE NUMBERED VERTICALLY BEGINNING TOP LEFT. BREAKER NUMBERS SHALL BE PERMANENTLY ATTACHED TO TRIM. PANEL SHALL BE MINIMUM 20" WIDE OR 16" FOR RESIDENTIAL LOAD CENTERS, UNLESS SPECIFICALLY NOTED OTHERWISE.

C. ANY SPECIAL REQUIREMENTS ON THE DRAWINGS OR SCHEDULES, SUCH AS GROUND FAULT PROTECTION, ARC-FAULT CIRCUIT BREAKERS, INCREASED INTERRUPTING CAPACITY, SHUNT TRIP TYPE CIRCUIT BREAKER, FEED THRU PANELBOARDS, ETC., SHALL SUPERSEDE THESE SPECIFICATIONS, BUT ONLY INSOFAR AS THAT PARTICULAR REQUIREMENT IS CONCERNED AND AS INDICATED.

D. WIRING IN PANELBOARD GUTTERS SHALL BE DONE IN A NEAT AND WORKMANLIKE MANNER. WIRING SHALL BE GROUPED INTO NEAT BUNDLES AND SECURED WITH NYLON TIE WRAPS.

E. PROVIDE TYPE WRITTEN DIRECTORIES FOR EACH PANELBOARD INDICATING THE LOAD SERVED.

X. LIGHTING FIXTURES:

A. LIGHTING FIXTURES SHALL BE FURNISHED AS SHOWN ON DRAWINGS AND IN THE LIGHTING FIXTURE SCHEDULE. IT SHALL SPECIFICALLY BE THE RESPONSIBILITY OF THE CONTRACTOR TO VERIFY EXACT TYPE CEILING AND RECESSING DEPTH OF ALL RECESSED FIXTURES AND TO FURNISH THE MOUNTING TRIMS AND ACCESSORIES OF THE SPECIFIED AND/OR APPROVED FIXTURES FOR THE CEILING TO BE INSTALLED. LIGHTING FIXTURES SHALL BE PROVIDED WITH JOINER PLATES, END CAPS, RETAINING CLIPS, PLASTER FRAMES, HOUSINGS, AND ALL OTHER ACCESSORIES REQUIRED FOR A COMPLETE INSTALLATION.

B. ALL FIXTURES SHALL BE EQUIPPED WITH LAMPS UNLESS OTHERWISE NOTED. LAMPS SHALL BE INSTALLED NEW, IMMEDIATELY PRIOR TO FINAL INSPECTION, AND SHALL NOT BE USED FOR CONSTRUCTION.

C. FIXTURE CATALOG NUMBER REPRESENTS BASIC LUMINARY SIZE, TYPE, QUALITY AND CONFIGURATION. ACCESSORIES SHALL BE FURNISHED WITH EACH UNIT AS REQUIRED FOR A COMPLETE FINISHED INSTALLATION. BASIC ACCESSORIES SHALL INCLUDE, BUT ARE NOT LIMITED TO, THE FOLLOWING:

1. JOINING PLATES, END CAPS, RETAINING CLIPS, ETC.
2. TRIMS FOR RECESSED FIXTURES.
3. FIXTURE STEMS AND CANOPIES FINISHED TO MATCH FIXTURES.
4. SPECIAL MOUNTING BRACKETS, TENONS, SLIP FILTERS, CONCRETE BASES, POLES, ANCHOR BOLTS, JUNCTION BOXES, AND STANCHIONS FOR ALL EXTERIOR LIGHTING FIXTURES. PROVIDE ALL WEATHERPROOFING FOR ALL LIGHTING FIXTURES TO BE INSTALLED IN EXTERIOR LOCATIONS.

D. STRUCTURAL SUPPORT OF ALL FIXTURES SHALL BE THE RESPONSIBILITY OF THE CONTRACTOR.

E. THE SYSTEM GROUNDING CONDUCTOR SHALL BE SECURED TO EACH FIXTURE BODY BY MEANS OF A BONDING SCREW.

F. OWNER/DEVELOPER WILL HAVE RIGHT TO RELOCATE LIGHTING FIXTURES OR LIGHTING SWITCHES WITHIN 72" OF LOCATION SHOWN ON FIRST WALK-THROUGH AT NO ADDITIONAL EXPENSE. COORDINATE THE WALK-THROUGH PRIOR TO THE INSTALLATION OF THE WIRING.

XI. FIRE ALARM SYSTEMS

A. THIS SECTION INCLUDES AUTOMATIC ADDRESSABLE VOICE EVACUATION FIRE ALARM SYSTEMS, INCLUDING FIRE ALARM CONTROL PANEL, AND REMOTE ANNUNCIATOR, MANUAL PULL STATIONS, HEAT AND SMOKE DETECTORS, FIRE ALARM AUDIO, VISUAL SIGNAL EQUIPMENT, CONTROLS, AND SURGE PROTECTION DEVICES. COORDINATE ALL WIRING AND DEVICE INTERFACES WITH OWNER'S REPRESENTATIVE. THE FIRE ALARM SYSTEM SHALL MEET THE LATEST ADOPTED EDITION OF NFPA 72 WITH ALL LOCAL AND STATE AMENDMENTS AND FEDERAL ADA REQUIREMENTS. ALL DEVICES SHALL BE WHITE IN COLOR WITH RED LETTERING.

B. GENERAL: COMPLETE, ZONED, NONCODED, ADDRESSABLE, MICROPROCESSOR-BASED FIRE DETECTION ALARM SYSTEM WITH MANUAL AND AUTOMATIC ALARM INITIATION SIGNALS FROM A SUPERVISED FIRE ALARM SOUND DISTRIBUTION SYSTEM. DEVICES LOCATED OUTDOORS SHALL BE SPECIFICALLY DESIGNED FOR EXTERIOR SERVICE. PROVIDE BATTERY BACK-UP BASED UPON TOTAL LOAD PER NFPA 72. ALARM SHALL ACHIEVE A MINIMUM OF 80 DB THROUGHOUT OCCUPIABLE SPACES AND MEET ADA REQUIREMENTS.

C. TRANSMISSION TO REMOTE CENTRAL STATION: PROVIDE WIRING TO AUTOMATICALLY ROUTE AN ALARM, SUPERVISORY, AND TROUBLE SIGNALS TO THE CENTRAL STATION SERVICE TRANSMITTER LOCATED IN MAIN FIRE ALARM CONTROL PANEL USING LISTED AND APPROVED EQUIPMENT. PROVIDE ALL NECESSARY WIRING CONNECTION BY THIS CONTRACTOR.

D. GENERAL ALARM: A SYSTEM GENERAL ALARM INCLUDES:

1. INDICATING THE GENERAL ALARM CONDITION AT THE FACP AND THE INTEGRAL ANNUNCIATOR.
2. IDENTIFYING THE DEVICE THAT IS THE SOURCE OF THE ALARM AT THE FACP AND THE ANNUNCIATOR.
3. INITIATING AUDIBLE AND VISIBLE ALARM SIGNALS THROUGHOUT THE BUILDING.
4. STOPPING HVAC SUPPLY AND RETURN FANS.
5. INITIATING TRANSMISSION OF ALARM SIGNAL TO REMOTE CENTRAL STATION.
6. MANUAL STATION ALARM OPERATION INITIATES A GENERAL ALARM.

SMOKE OR HEAT DETECTION INITIATES A GENERAL ALARM.

E. INSTALLER QUALIFICATIONS: A CERTIFIED FACTORY-TRAINED TECHNICIAN IS TO PERFORM THE WORK OF THIS SECTION, MAKING UP ALL TERMINAL CABINETS, INSTALLING ALL SURGE SUPPRESSORS, AND INCLUDING LANDING AND TESTING EACH WIRE, MOUNTING AND CONNECTING ALL DEVICES, PROGRAMMING THE MAIN FACP, TROUBLE SHOOTING AND CERTIFYING THE FINAL SYSTEM. THE CONTRACTOR SHALL BE CURRENTLY LICENSED BY THE STATE OF FLORIDA FOR FIRE ALARM WORK, AND SHALL BE A CERTIFIED FACTORY-TRAINED TECHNICIAN. CONTRACTOR IS RESPONSIBLE FOR OBTAINING NECESSARY FIRE ALARM PERMITS FROM AUTHORITY HAVING JURISDICTION.

F. FIRE ALARM DEVICES AND EQUIPMENT TO BE INSTALLED OUTDOORS IN EXTERIOR LOCATIONS SHALL BE SPECIFICALLY DESIGNED AND U.L. LISTED AS WEATHER AND WATERPROOF. PROVIDE WEATHERPROOF NEOPRENE GASKETS BETWEEN WALL MOUNTING SURFACE AND FIRE ALARM DEVICE FOR ALL DEVICES MOUNTED OUTDOORS.

G. AVAILABLE MANUFACTURERS: SUBJECT TO COMPLIANCE WITH REQUIREMENTS. ALL DEVICES SHALL BE PROVIDED FOR AND MANUFACTURED BY SIMPLEX, EST, NOTIFIER, OR PYROTRONICS.

H. DESCRIPTION: DOUBLE-ACTION NON-BREAK GLASS, ADDRESSABLE TYPE, FABRICATED OF METAL OR PLASTIC, AND FINISHED IN WHITE WITH MOLDED, RAISED-LETTER OPERATING INSTRUCTIONS OF RED COLOR. ADDRESS OF UNIT SHALL BE FIELD-SETTABLE WITHOUT SPECIAL TOOLS.

I. INITIATION CIRCUITS (LOOP): INITIATION LOOP CONDUCTORS SHALL BE WEST PENN #D991 FOR 3000'-0" IN LENGTH AND LESS. WEST PENN #D995 SHALL BE USED FOR CIRCUITS OVER 3000'-0" IN LENGTH. BELOW GRADE, WET OR DAMP LOCATION INSTALLED CABLE, INCLUDING CABLE INSTALLED ON THE TOP OF EXTERIOR WALKWAYS, SHALL BE WEST PENN AQUASEAL MULTI-CONDUCTOR (14 GAUGE), UNLESS NOTED OTHERWISE, SHALL BE INSTALLED IN CONDUIT.

J. SIGNAL CIRCUITS: SIGNAL CIRCUITS SHALL BE #12 AWG THWN 19 STRAND COPPER.

K. ANNUNCIATOR CIRCUITS: #12 AWG THWN 19 STRAND COPPER.

L. EACH AND EVERY WIRE SHALL BE LABELED AT EACH END WITH SLC #, CHANNEL # OR SIGNAL #. EACH SEPARATE CIRCUIT, INITIATION, SIGNAL AND AUXILIARY SHALL HAVE A SPECIFIC NUMBER. LABEL EACH CONDUCTOR BY THIS CIRCUIT NUMBER AT THE CONTROL CONNECTIONS AND AT EACH TERMINAL CONNECTION IN THE TERMINAL CABINETS.

M. PROVIDE COMPLETE SIGNAL, SPEAKER DATA LOOP AND POWER SIDE SURGE SUPPRESSION MODULES ON ALL WIRING ENTERING OR LEAVING EACH BUILDING. THE CONTRACTOR SHALL REPAIR ANY DAMAGED COMPONENTS OR WIRING DUE TO TRANSIENT VOLTAGE SURGES FOR A PERIOD OF ONE YEAR FROM SUBSTANTIAL COMPLETION DATE AT NO ADDITIONAL COST.

N. PROVIDE RELAYS FOR OTHER LOCAL CONTROL SUCH AS HVAC SHUTDOWN AND/OR STAIR PRESSURIZATION FAN INITIATION, ROLL-UP DOOR ACTIVATION, FIRE/SMOKE DAMPER RELEASE OR SMOKE EVACUATION INITIATION. RELAYS SHALL BE 10 AMP RATED RELAYS. UPON ACTIVATION OF THE FIRE ALARM SYSTEM, THE RELAY SHALL ACTIVATE AND SHUTDOWN THE CONTROLLED EQUIPMENT. LOCATE ALL RELAYS WITHIN 36" OF EQUIPMENT CONTROLLED. PROVIDE WEATHERPROOF UNITS WHERE INDICATED OR INSTALL IN WEATHERPROOF BOXES.

O. PROVIDE REMOTE AUDIO/VISUAL POWER SUPPLY AND BATTERY CHARGER IN A SELF-CONTAINED LOCKABLE CABINET. PROVIDE (4) STYLE Y NOTIFICATION CIRCUITS, AND AN INTEGRAL BATTERY CHARGER. PROVIDE UNIT WITH INTEGRAL 120 VOLT INPUT A/C POWER AND INTEGRAL LEAD ACID BATTERY. PROVIDE SURGE SUPPRESSION FOR 120 VOLT BRANCH CIRCUIT AND PROVIDE A 20 AMP 125 VAC SPECIFICATION GRADE KEY TYPE SWITCH TO CONTROL THE POWER TO THE SIGNAL EXPANDER FOR MAINTENANCE. IDENTIFY THE 120 VOLT CIRCUIT SERVING THE SWITCH (I.E. PANELBOARD AND BRANCH CIRCUIT NUMBER)

P. PROVIDE A FLUSH MOUNTED LCD REMOTE ANNUNCIATOR. UNIT SHALL BE NO LARGER THAN 12" TALL X 16" LONG, AND SHALL BE COMPLETELY FLUSH MOUNTED IN THE MAIN LOBBY OF THE FACILITY.

Q. INSTALLATION: CONTRACTOR SHALL PROVIDE ALL CONDUIT, WIRING RELAYS, CONTROLS AND ASSOCIATED DEVICES AND DETECTORS FOR PHASE I AND PHASE II RECALL PER FLORIDA BUILDING CODE (FBC) REQUIREMENTS AND STATE ELEVATOR INSPECTOR REQUIREMENTS.

R. WIRING METHOD: INSTALL WIRING IN METAL RACEWAY. CONCEAL RACEWAY EXCEPT IN UNFINISHED SPACES AND AS INDICATED.

S. NO FIRE ALARM CONDUCTORS SHALL BE INSTALLED BELOW GRADE WITH THE EXCEPTION OF CONDUCTORS ROUTED FROM BUILDING TO BUILDING, AS NOTED, OR WHERE ABSOLUTELY NECESSARY AND WITH PRIOR WRITTEN PERMISSION OF THE OWNER AND ENGINEER. ALL OTHER WIRING SHALL BE OVERHEAD INSTALLED IN CONCEALED CONDUIT MINIMUM 1/2". NO UNDERGROUND, ON GROUND OR UNDERGROUND SPLICES IN PULL BOXES WILL BE ALLOWED.

T. MOUNTING BOXES FOR SPEAKERS/HORN/STROBES, CONTROL AND MONITOR MODULES SHALL BE INSTALLED IN DEEP JUNCTION BOXES WITH EXTENSION RING ATTACHED.

U. MINIMUM SYSTEM TESTS: TEST THE SYSTEM ACCORDING TO THE PROCEDURES OUTLINED IN NFPA 72. MINIMUM REQUIRED TESTS ARE AS FOLLOWS:

1. VERIFY THE ABSENCE OF UNWANTED VOLTAGES BETWEEN CIRCUIT CONDUCTORS AND GROUND.
2. MEGGER TEST ALL CONDUCTORS OTHER THAN THOSE INTENTIONALLY AND PERMANENTLY GROUNDED WITH ELECTRONIC COMPONENTS DISCONNECTED. TEST FOR RESISTANCE TO GROUND. REPORT READINGS OF LESS THAN 1-MEGOHM FOR EVALUATION.
3. TEST ALL CONDUCTORS FOR SHORT CIRCUITS UTILIZING AN INSULATION-TESTING DEVICE.
4. WITH EACH CIRCUIT PAIR, SHORT CIRCUIT AT THE FAR END OF THE CIRCUIT AND MEASURE THE CIRCUIT RESISTANCE WITH AN OHMMETER. RECORD THE CIRCUIT RESISTANCE OF EACH CIRCUIT ON THE RECORD DRAWINGS.
5. VERIFY THE CONTROL UNIT IS IN THE NORMAL CONDITION AS DETAILED IN THE MANUFACTURER'S OPERATING AND MAINTENANCE MANUAL.
6. TEST INITIATING AND INDICATING CIRCUITS FOR PROPER SIGNAL TRANSMISSION UNDER OPEN CIRCUIT CONDITIONS. ONE CONNECTION EACH SHOULD BE OPENED AT NOT LESS THAN 10 PERCENT OF THE INITIATING AND INDICATING DEVICES. OBSERVE PROPER SIGNAL TRANSMISSION ACCORDING TO CLASS OF WIRING USED.
7. TEST EACH INITIATING AND INDICATING DEVICE FOR ALARM OPERATION AND PROPER RESPONSE AT THE CONTROL UNIT. TEST SMOKE DETECTORS WITH ACTUAL PRODUCTS OF COMBUSTION.
8. TEST THE SYSTEM FOR ALL SPECIFIED FUNCTIONS ACCORDING TO THE MANUFACTURER'S OPERATING AND MAINTENANCE MANUAL. SYSTEMATICALLY INITIATE SPECIFIED FUNCTIONAL PERFORMANCE ITEMS AT EACH STATION INCLUDING MAKING ALL POSSIBLE ALARM AND MONITORING INITIATIONS AND USING ALL COMMUNICATIONS OPTIONS. FOR EACH ITEM, OBSERVE RELATED PERFORMANCE AT ALL DEVICES REQUIRED TO BE AFFECTED BY THE ITEM UNDER ALL SYSTEM SEQUENCES. OBSERVE INDICATING LIGHTS, DISPLAYS, SIGNAL TONES, AND ANNUNCIATOR INDICATIONS. OBSERVE ALL VOICE AUDIO FOR ROUTING, CLARITY, QUALITY, FREEDOM FROM NOISE AND DISTORTION, AND PROPER VOLUME LEVEL.
9. TEST BOTH PRIMARY POWER AND SECONDARY POWER. VERIFY, BY TEST, THE SECONDARY POWER SYSTEM IS CAPABLE OF OPERATING THE SYSTEM FOR THE PERIOD AND IN THE MANNER SPECIFIED.

V. OCCUPANCY ADJUSTMENTS: WHEN REQUESTED WITHIN ONE YEAR OF DATE OF SUBSTANTIAL COMPLETION, PROVIDE ON-SITE ASSISTANCE IN ADJUSTING SOUND LEVELS AND ADJUSTING CONTROLS AND SENSITIVITIES TO SUIT ACTUAL OCCUPIED CONDITIONS. PROVIDE UP TO FIVE PREPAID VISITS TO THE SITE FOR THIS PURPOSE.

W. PROVIDE THE SERVICES OF A FACTORY-AUTHORIZED SERVICE REPRESENTATIVE TO DEMONSTRATE THE SYSTEM AND TRAIN OWNER'S MAINTENANCE PERSONNEL AS SPECIFIED BELOW:

1. TRAIN OWNER'S MAINTENANCE PERSONNEL IN THE LOCATION OF DEVICES, BOXES, PROCEDURES AND SCHEDULES INVOLVED IN OPERATING, TROUBLESHOOTING, SERVICING, AND PREVENTIVE MAINTAINING OF THE SYSTEM. PROVIDE A MINIMUM OF 4 HOURS TRAINING. TRAINING SHALL INCLUDE A COMPLETE PROJECT WALKDOWN WITH OWNER'S AUTHORIZED REPRESENTATIVE TO IDENTIFY DEVICE LOCATIONS, JUNCTION BOX LOCATIONS AND SURGE SUPPRESSION MODULE LOCATIONS.
2. SCHEDULE TRAINING WITH THE OWNER AT LEAST SEVEN WORKING DAYS IN ADVANCE.

LAFATE WILSON
architects

1030 arlington ave n, st petersburg fl 33705
(727) 490-9483
studio@lafatewilson.com

THE ARCHITECT'S COMMON LAW COPYRIGHT AND OTHER PROPERTY RIGHTS ARE HEREBY RESERVED IN THE IDEAS, DESIGNS, PLANS, DRAWINGS, AND SPECIFICATIONS SHALL NOT BE REPRODUCED OR CONVEYED IN ANY MANNER NOR ASSIGNED TO ANY THIRD PARTY WITHOUT FIRST OBTAINING THE EXPRESS WRITTEN PERMISSION OF THE ARCHITECT.

OLD MEMORIAL

13600 National Golf Dr
Tampa, FL 33626

no.	description	date
	PERMIT SET	04.24.26

E8.01

ELECTRICAL SPECIFICATIONS

sheet size 24" x 36"

Reviewed for Code Compliance
With The Florida Building Code
ECS Florida LLC
41-5640-BLD2 7/20/2026

Electrical Review - Roger Sanders PX651 - Reviewed - 7/14/2026
Mechanical Review - Roger Sanders PX651 - Reviewed - 7/14/2026
Plumbing Review - Roger Sanders PX651 - Reviewed - 7/14/2026
Fire Review - Jay Traina - NA to Private Provider - 7/16/2026
Building Review - Roger Sanders PX651 - Reviewed - 7/14/2026

ABBREVIATIONS

ABV ABOVE
ADJ ADJUSTABLE
AF AIRFOIL
AFF ABOVE FINISHED FLOOR
AHU AIR HANDLING UNIT
AP ACCESS PANEL
BAS BUILDING AUTOMATION SYSTEM
BI BACKWARD INCLINE
BLDG BUILDING
BHP BRAKE HORSEPOWER
BTUH BRITISH THERMAL UNIT PER HOUR
BDD BACKDRAFT DAMPER
CD CONDENSATE DRAIN
CFM CUBIC FEET PER MINUTE
CLG CEILING
CHW CHILLED WATER
CHWR CHILLED WATER RETURN
CHWS CHILLED WATER SUPPLY
CWR CONDENSER WATER RETURN
CWS CONDENSER WATER SUPPLY
CONC CONCRETE
CONT CONTINUOUS
CO CARBON MONOXIDE
CO_2 CARBON DIOXIDE
CU CONDENSING UNIT
DB DRYBULB
DWGS DRAWINGS
DX DIRECT EXPANSION
EF EXHAUST FAN
EXH EXHAUST
EA EACH
EAT ENTERING AIR TEMPERATURE
EER ENERGY EFFICIENCY RATIO
ELECT ELECTRICAL
ENT ENTERING
EQ EQUAL
EWT ENTERING WATER TEMPERATURE
FC FORWARD CURVED
FCU FAN COIL UNIT
FD FIRE DAMPER
FL FLOOR
FLEX FLEXIBLE CONNECTOR OR DUCT
FPM FEET PER MINUTE
F/S COMBINATION FIRE AND SMOKE DAMPER
FT H_2O FEET WATER GAUGE
F DEGREES FAHRENHEIT
GA GAUGE
GAL GALLON
GALV GALVANIZED
GPM GALLONS PER MINUTE
H HUMIDISTAT
HP HORSEPOWER
HTWR HIGH TEMPERATURE HOT WATER RETURN
HTWS HIGH TEMPERATURE HOT WATER SUPPLY
HW HOT WATER
HWR HOT WATER RETURN
HWS HOT WATER SUPPLY
HVAC HEATING VENTILATION AND AIR CONDITIONING
HV HEATING AND VENTILATING
IN WG INCHES WATER GAUGE
KW KILOWATTS
LAT LEAVING AIR TEMPERATURE
LWT LEAVING WATER TEMPERATURE
MA MAKE-UP AIR
MAX MAXIMUM
MBH 1,000 X BTUH
MIN MINIMUM
MD MANUAL VOLUME DAMPER
M MOTORIZED DAMPER
MZ MULTI-ZONE
NTS NOT TO SCALE
OA OUTSIDE AIR
OBMVD OPPOSED BLADE MANUAL VOLUME DAMPER
PROP PROPELLER
PCR PRE-CONDITIONED AIR SYSTEM RETURN WATER
PD PRESSURE DROP
PLBG PLUMBING
PSIA POUNDS PER SQUARE INCH ABSOLUTE
PSIG POUNDS PER SQUARE INCH GAUGE
R REFRIGERANT PIPING
RA RETURN AIR
RD RADIATION DAMPER
REG REGISTER
REQ'D REQUIRED
RH RELATIVE HUMIDITY
RPM REVOLUTIONS PER MINUTE
RTU ROOFTOP UNIT
SA SUPPLY AIR
SEER2 SEASONAL ENERGY EFFICIENCY RATIO 2
SF SQUARE FOOT
SD SMOKE DETECTOR
SDMP SMOKE DAMPER
SR SUPPLY REGISTER
STR STARTER
SZ SINGLE ZONE
T THERMOSTAT
TEFC TOTALLY ENCLOSED FAN COOLED
TEMP TEMPERATURE
T/O TRANSFER OPENING ABOVE CEILING
TS TEMPERATURE SENSOR
TYP TYPICAL
VFD VARIABLE FREQUENCY DRIVE
VAV VARIABLE AIR VOLUME
VS VARIABLE SPEED
W WATTS
W/ WITH
W/O WITHOUT
WB WETBULB
ZD ZONE DAMPER

GENERAL NOTES

1. INSTALL EQUIPMENT AND MATERIALS IN COMPLIANCE WITH MANUFACTURER'S MINIMUM CLEARANCE REQUIREMENTS AND RECOMMENDATIONS.
2. COMPLY WITH THE LATEST EDITIONS OF NFPA AND THE 8TH EDITION OF THE 2023 FLORIDA BUILDING CODE (MECHANICAL, PLUMBING, GAS AND ENERGY CONSERVATION).
3. ALL MATERIALS SHALL FIT THE SPACE AVAILABLE. VERIFY DIMENSIONS AND CLEARANCES ON BUILDING PLANS PRIOR TO COMMENCING WORK.
4. AN INDEPENDENT TEST AND BALANCE CONTRACTOR (TABC) SHALL BE HIRED BY THE GENERAL CONTRACTOR.
5. TABC IS RESPONSIBLE FOR TESTING AND BALANCING OF AIR SYSTEMS IN ACCORDANCE WITH AABC GUIDELINES. A TEST AND BALANCE REPORT SHALL BE SUBMITTED TO THE ARCHITECT FOR APPROVAL.
6. PROVIDE 45 DEGREE BRANCH TAKE-OFF PER SMACNA FIG. 2-8 ON ALL RECTANGULAR DUCT TAKE-OFFS.
7. ALL DUCTWORK TAKE-OFFS AND/OR BRANCH DUCTWORK SHALL BE PROVIDED WITH BALANCING DAMPERS (REMOTE IF IN HARD CEILING AREAS).
8. CONTRACT SHALL MAINTAIN ALL RATED FIRE, SMOKE AND MEMBRANE ASSEMBLIES (EVEN IF NOT NOTED ON PLANS). PROVIDE AND INSTALL FIRE/SMOKE/RADIATION DAMPERS AT ALL RATED PENETRATIONS AND PROVIDE DUCT MOUNTED HINGED ACCESS DOORS. THIS APPLIES FOR ALL FIRE/SMOKE/RADIATION DAMPERS.
9. CONTRACTOR SHALL COORDINATE VOLTAGE AND PHASE OF EACH PIECE OF EQUIPMENT WITH THE ELECTRICAL CONTRACTOR PRIOR TO ORDERING AND SHALL COORDINATE WITH ALL OTHER TRADES PRIOR TO OR INSTALLING EQUIPMENT AND MATERIALS.
10. COORDINATE ALL HVAC SYSTEM DRAWINGS WITH EXISTING/NEW TRUSS TO AVOID INTERFERENCE BETWEEN MECHANICAL SYSTEMS AND ROOF STRUCTURE. CONTRACTOR SHALL BE RESPONSIBLE FOR ALL COSTS ASSOCIATED WITH TRUSS INTERFERENCE THAT OCCURS IN THE FIELD DURING CONSTRUCTION. COORDINATE IN ADVANCE. DUCT SIZES MAY BE REVISED TO FIT TRUSS SYSTEM SO LONG AS THE EQUIVALENT INSIDE CROSS SECTIONAL AREA IS NOT DECREASED.
11. GAUGES AND CONSTRUCTION FOR DUCTWORK SHALL CONFORM TO THE LATEST EDITION OF SMACNA'S HVAC DUCT CONSTRUCTION STANDARDS.
12. TRANSITION RECTANGULAR DUCTWORK ON BOTTOM AND SIDES. MAINTAIN TOP OF DUCTWORK LEVEL AND HIGH AS POSSIBLE. FLEXIBLE DUCT RUN-OUTS TO CEILING DIFFUSERS SHALL BE AS STRAIGHT AS POSSIBLE AND FREE OF SAGS AND KINKS. FLEX DUCT SHALL BE THE SAME SIZE AS THE DIFFUSER NECK IT SERVES.
13. ALL DUCT TRANSITIONS FROM SQUARE TO ROUND SHALL BE SMOOTH SQUARE TO ROUND TRANSITIONS. SPIN-IN FITTINGS AT THE END OF CAPPED DUCTS ARE NOT ACCEPTABLE. DUCT DIMENSIONS SHOWN ARE INSIDE CLEAR DIMENSIONS.
14. THE CONTRACTOR SHALL FULFILL ALL REQUIREMENTS OF THE CONTRACT DOCUMENTS AND SHALL COMPLETE THE WORK SHOWN ON THESE DRAWINGS. ALL SYSTEMS SHALL BE FINISHED, TESTED AND BALANCED, ADJUSTED, AND PROVEN TO BE FULLY OPERATIONAL AND USEABLE.
15. ADJUST ALL DIFFUSERS IN CORRIDORS OR WITHIN THREE (3) FEET OF A WALL TO PROVIDE 2-WAY OR 3-WAY BLOW AWAY FROM OR PARALLEL TO WALLS. ALL DIFFUSERS SHALL HAVE 4-WAY BLOW UNLESS NOTED OTHERWISE.
16. PORTIONS OF DUCTWORK VISIBLE THROUGH GRILLES AND REGISTERS IN FINISHED AREAS SHALL BE PAINTED FLAT BLACK.
17. ALL DAMPERS IN AND ABOVE CEILING SHALL BE ACCESSIBLE. CONTRACTOR SHALL COORDINATE ALL ACCESS PANELS IN CEILINGS OR WALLS WITH ARCHITECTURAL REFLECTED CEILING PLANS AND INTERIOR DRAWINGS FOR PROPER LOCATION. REMOTE DAMPERS CAN BE INSTALLED ON AIR DEVICES LOCATED WITHIN HARD CEILINGS.
18. MOUNT THERMOSTATS WHERE INDICATED ON PLANS 4'-0" ABOVE FINISHED FLOOR UNLESS NOTED OTHERWISE. IN HANDICAPPED ACCESSIBLE AREAS, MOUNT CONTROLS AT 4'-0" (MAXIMUM) ABOVE FINISHED FLOOR.
19. COORDINATE DUCTWORK AND PIPING WITH PLUMBING, FIRE PROTECTION AND ELECTRICAL. MAKE OFFSETS AND TRANSITIONS TO COORDINATE WITH OTHER TRADES WITHOUT ANY ADDITIONAL EXPENSE TO THE CONTRACT.
20. SEAL ALL TRANSVERSE JOINTS AND FITTINGS WITH DUCT SEALER.
21. TRAP AND ROUTE CONDENSATE DRAINS LINES, FULL SIZE OF UNIT CONNECTION, AS INDICATED. SLOPE 1/8" PER FOOT.
22. ALTERNATE MANUFACTURERS AND MODELS WILL BE REVIEWED. THERE MAY BE ARCHITECTURAL, STRUCTURAL AND ELECTRICAL CHANGES RESULTING FROM THE ALTERNATES. THE COST OF IMPLEMENTING AND ENGINEERING THESE CHANGES SHALL BE BORNE BY THE MECHANICAL SUBCONTRACTOR.
23. PIPE AND DUCT ROUTING SHOWN IS SCHEMATIC. PROVIDE ANY ADDITIONAL OFFSETS AND FITTINGS, INCLUDING DIVIDED DUCTS, REQUIRED FOR PROPER INSTALLATION AND TO MAINTAIN CLEARANCES AS ENCOUNTERED IN THE FIELD.
24. COORDINATE CEILING MOUNTED AIR DEVICE LOCATION WITH REFLECTED CEILING PLAN AND OTHER TRADES.
25. ALL CONTROL WIRING AND CONDUIT SHALL COMPLY WITH NEC DIVISION 16 SPECIFICATIONS.
26. PROVIDE MATERIALS WHICH HAVE A FLAME SPREAD RATING OF 25 OR LESS AND A SMOKE DEVELOPED RATING OF 50 OR LESS WHEN TESTED IN ACCORD WITH ASTM E84.
27. SLEEVE AND FIRE STOP PENETRATIONS THROUGH FIRE RATED SYSTEMS TO MAINTAIN RATING OF SYSTEM. USE MINIMUM GALVANIZED STEEL GAUGE DUCT AS REQUIRED TO MAINTAIN RATING OF SYSTEM.
28. WHERE DRYER EXHAUST DUCT IS CONCEALED WITHIN THE BUILDING CONSTRUCTION, IF THE EQUIVALENT LENGTH OF THE DUCT IS MORE THAN 35'-0" IT SHALL BE IDENTIFIED ON A PERMANENT LABEL OR TAG. THE LABEL OR TAG SHALL BE LOCATED WITHIN 6 FEET OF THE EXHAUST DUCT CONNECTION.
29. CONTRACTOR TO ORDER ALL FIRE/SMOKE DAMPERS WITH INTEGRAL SMOKE DETECTORS AND END STOP INDICATOR OPTIONS. VERIFY VOLTAGE WITH ELECTRICAL DRAWINGS. IF BUILDING IS EQUIPPED WITH FIRE ALARM SYSTEM ALL FIRE/SMOKE DAMPERS WILL BE CONNECTED TO BUILDING FIRE ALARM SYSTEM.
30. ALL MECHANICAL EQUIPMENT SHALL BE THOROUGHLY CLEANED OF ALL DIRT, OIL, CONCRETE, ETC. ANY DENTS, SCRATCHES OR OTHER VISIBLE BLEMISHES SHALL BE CORRECTED AND THE APPEARANCE OF THE EQUIPMENT MADE "LIKE NEW" AND TO THE SATISFACTION OF THE ARCHITECT/ENGINEER. UPON COMPLETION, AND BEFORE FINAL ACCEPTANCE OF THE WORK, ALL DEBRIS, RUBBISH, LEFTOVER MATERIALS, TOOLS AND EQUIPMENT SHALL BE REMOVED FROM THE SITE. PROTECTION OF WORK UNTIL FINAL ACCEPTANCE: PROTECT ALL MATERIALS AND EQUIPMENT FROM DAMAGE, ENTRANCE OF DIRT AND CONSTRUCTION DEBRIS FROM THE TIME OF INSTALLATION UNTIL FINAL ACCEPTANCE. ANY MATERIALS AND EQUIPMENT WHICH ARE DAMAGED SHALL BE REPAIRED TO "AS NEW" CONDITION OR REPLACED AT THE DIRECTION OF THE ARCHITECT/ENGINEER. WHERE FACTORY FINISHES OCCUR AND DAMAGE IS MINOR, FINISHES MAY BE TOUCHED UP. IF, IN THE OPINION OF THE ARCHITECT/ENGINEER THE DAMAGE IS EXCESSIVE, FACTORY FINISH SHALL BE REPLACED TO "NEW" CONDITION.
31. DRAWINGS ARE DIAGRAMMATIC AND INDICATE THE GENERAL ARRANGEMENT AND EXTENT OF WORK. EXACT LOCATIONS AND ARRANGEMENT OF MATERIALS AND EQUIPMENT SHALL BE DETERMINED, WITH THE ACCEPTANCE OF THE ARCHITECT/ENGINEER, AS WORK PROGRESSES TO CONFORM IN THE BEST POSSIBLE MANNER WITH THE SURROUNDINGS AND WITH THE ADJOINING WORK OF OTHER TRADES. WHERE LOCATIONS OF EQUIPMENT, DEVICES OR FIXTURES ARE CONTROLLED BY ARCHITECTURAL FEATURES, ESTABLISH SUCH LOCATIONS BY REFERRING TO DIMENSIONS ON ARCHITECTURAL DRAWINGS AND NOT BY SCALING DRAWINGS.
32. IN CASE OF DIFFERENCES BETWEEN DRAWINGS AND SPECIFICATIONS, OR WHERE DRAWINGS AND SPECIFICATIONS ARE NOT CLEAR OR DEFINITE, THE SUBJECT SHALL BE REFERRED TO ARCHITECT/ENGINEER FOR CLARIFICATION AND INSTRUCTIONS.
33. ANY INTERRUPTION OF EXISTING MECHANICAL AND ELECTRICAL SERVICES SHALL BE COORDINATED IN ADVANCE WITH THE OWNER'S REPRESENTATIVE. THIS INCLUDES, BUT IS NOT LIMITED TO, SERVICES PROVIDING CHILLED WATER, ELECTRICITY, OR OTHER CRITICAL SYSTEMS AS MAY BE PERTINENT TO THIS PARTICULAR PROJECT. SERVICE INTERRUPTION TIMES AND DURATION OF INTERRUPTION OF SERVICES SHALL BE DECIDED BY THE OWNER. PROVIDE APPROPRIATE PROVISIONS (SUCH AS ISOLATION SHUT-OFF VALVES, DAMPERS, END CAPS, AND SIMILAR ITEMS) AS NECESSARY TO ACCOMMODATE THE REQUIRED SERVICE INTERRUPTIONS. IF SHUTDOWNS CANNOT BE ACCOMMODATED, PROVIDE MEANS FOR "WET" TAPPING OR "HOT" TAPPING OF PIPING SYSTEMS.
34. ALL MAIN DUCTWORK SHOWN PER PLAN IS TO BE SHEET METAL OR DUCT BOARD. ALL DUCT BOARD INSTALLATIONS ARE TO BE APPROVED BY BUILDING OWNER PRIOR TO MATERIAL PURCHASE.
35. FIRE AND FIRE/SMOKE DAMPERS ARE REQUIRED TO BE UL LISTED AND APPROVED FOR THE ASSEMBLIES LISTED ON THE ARCHITECTURAL DRAWINGS. THESE DAMPERS MUST ALSO BE REVIEWED AND APPROVED BY THE ARCHITECT PRIOR TO ORDERING.
36. TOTAL DEVELOPED LINESET LENGTH, INCLUDING HORIZONTAL AND VERTICAL DISTANCE, TO BE VERIFIED WITH CONDENSING UNIT MANUFACTURER PRIOR TO PURCHASE. IF CONDENSING UNIT LOCATIONS EXCEED THE MANUFACTURER'S RECOMMENDED TOTAL LINESET LENGTH VERIFY THE MANUFACTURER HAS AN OPTION TO ALLOW FOR LONG LINESETS AND PROVIDE ACCESSORIES AS REQUIRED.
37. WHERE REFRIGERANT LINES ARE INSTALLED IN STUDS, JOISTS, RAFTERS OR SIMILAR MEMBER SPACES AND LOCATED LESS THAN FROM THE NEAREST EDGE OF THE MEMBER THEY MUST BE CONTINUOUSLY PROTECTED BY SHIELD PLATES PER FMC 1101.3.

SYMBOL LEGEND

SUPPLY DIFFUSER
RETURN OR OUTDOOR AIR GRILLE
EXHAUST GRILLE
LINEAR SLOT DIFFUSER
SIDEWALL TRANSFER GRILLE
SIDEWALL SUPPLY REGISTER
SIDEWALL RETURN GRILLE OR OUTSIDE AIR LOUVER
SIDEWALL EXHAUST GRILLE
RD — RADIATION DAMPER INSTALLED IN AIR DEVICE
RD — RADIATION DAMPER INSTALLED IN DUCT
SUPPLY DUCT UP SECTION (RECTANGULAR)
RETURN DUCT UP SECTION (RECTANGULAR)
EXHAUST DUCT UP SECTION (RECTANGULAR)
SUPPLY DUCT DOWN SECTION (RECTANGULAR)
RETURN DUCT DOWN SECTION (RECTANGULAR)
EXHAUST DUCT DOWN SECTION (RECTANGULAR)
SUPPLY DUCT UP SECTION (ROUND)
SUPPLY DUCT DOWN SECTION (ROUND)
EXISTING DUCTWORK TO REMAIN (LIGHT LINETYPE)
A/B — RECTANGULAR DUCTWORK WITH TAKE-OFF, BALANCING DAMPER AND INSULATED FLEXIBLE ROUND DUCT. SAME SIZE AS DIFFUSER INLET UNLESS NOTED OTHERWISE. FIRST DIMENSION IS THAT OF SIDE SHOWN
A — ROUND DUCTWORK
CONICAL FITTING WITH DAMPER ON BRANCH CONNECTION TO RECTANGULAR MAIN (PROVIDE DAMPER IN LOW PRESSURE DUCTWORK ONLY)
L=1/4W, MIN. 4" — 45° — W — RECTANGULAR BRANCH DUCT CONNECTION. (PROVIDE BALANCING DAMPER AT ALL BRANCH CONNECTIONS)
ELBOW WITH TURNING VANES
OPPOSED BLADE VOLUME DAMPER (OBD)
MANUAL DAMPER
FLEXIBLE DUCT CONNECTION
FIRE/RADIATION DAMPER WITH ACCESS PANEL
COMBINATION FIRE/SMOKE DAMPER WITH ACCESS PANEL (PROVIDED BY MECHANICAL CONNECTED BY ELECTRICAL PROVIDE 120V CIRCUIT AND FIRE ALARM CONNECTION IF APPLICABLE)
EXISTING DUCTWORK TO BE REMOVED (DASHED LINETYPE)
DUCT MOUNTED SMOKE DETECTOR PROVIDED AND WIRED BY ELECTRICAL CONTRACTOR AND INSTALLED IN DUCT BY MECHANICAL CONTRACTOR. REFER TO SPECIFICATIONS FOR CONTROL REQUIREMENTS.
FLEX DUCT
OPENING IN WALL ABOVE CEILING
TS — WALL MOUNTED TEMPERATURE SENSOR MOUNT 4'-0" ABOVE FINISHED FLOOR
WALL MOUNTED THERMOSTAT MOUNT 4'-0" ABOVE FINISHED FLOOR
CO — WALL MOUNTED CO SENSOR MOUNT 4'-0" ABOVE FINISHED FLOOR
H — WALL MOUNTED HUMIDITY SENSOR MOUNT 4'-0" ABOVE FINISHED FLOOR
CO_2 — WALL MOUNTED CO_2 SENSOR MOUNT 4'-0" ABOVE FINISHED FLOOR

REFERENCE NOTES
EQUIPMENT TYPE / MARK — EQUIPMENT TAG
PHOTO DETAIL OR SECTION IDENTIFICATION TARGET A = DETAIL NUMBER B = SHEET NUMBER ON WHICH DETAIL IS LOCATED
A-100 — AIR DEVICE TAG MARK-CFM
UC — 1" DOOR UNDER CUT. ARROW INDICATES DIRECTION OF FLOW
FLOW DIRECTION
INDICATES POINT OF CONNECTION BETWEEN NEW AND EXISTING
POINT OF DISCONNECT
CWS — CONDENSER WATER SUPPLY PIPING
CWR — CONDENSER WATER RETURN PIPING
BCWS — BUILDING CONDENSER WATER SUPPLY PIPING
BCWR — BUILDING CONDENSER WATER RETURN PIPING
CHWS — CHILLED WATER SUPPLY PIPING
CHWR — CHILLED WATER RETURN PIPING
HWS — HOT WATER SUPPLY PIPING
HWR — HOT WATER RETURN PIPING
CD — CONDENSATE DRAIN PIPING
R — REFRIGERANT PIPING
FS — FLOW SENSOR
SP — STATIC PRESSURE TRANSMITTER ASSEMBLY
TEE (PLAN, UP, DOWN)
ELBOW (PLAN, UP, DOWN)
VALVE
TWO WAY MOTORIZED CONTROL VALVE
THREE WAY MOTORIZED CONTROL VALVE
PRESSURE REDUCING VALVE
FLOW CONTROL VALVE
SHUT-OFF VALVE
BUTTERFLY VALVE
CHECK VALVE
STRAINER
BALANCE VALVE WITH INTEGRAL TAPS FOR CONNECTION OF DIFFERENTIAL PRESSURE METER. VALVE SHALL HAVE NAMEPLATE INDICATING WATER FLOW RATE VERSUS VALVE PRESSURE DROP
A — AUTOMATIC FLOW CONTROL VALVE WITH INTEGRAL TEMPERATURE AND PRESSURE TEST PORTS
UNION
VENTURI FLOW METER
PRESSURE AND/OR TEMPERATURE PORT
THERMOMETER
PRESSURE GAUGE WITH GAUGE COCK
FLEXIBLE CONNECTION
PRESSURE RELIEF VALVE

GREEN BUILDING NGBS REQUIREMENTS (2020)

1. SECTION 701.4.1.1 (MANDATORY): HVAC LOADS HAVE BEEN CALCULATED USING AN EQUIVALENT METHOD TO ACCA MANUAL J. HVAC EQUIPMENT HAS BEEN SELECTED USING AN EQUIVALENT METHOD TO ACCA MANUAL S.
2. SECTION 701.4.2.1 (MANDATORY): DUCTS SHALL BE AIR SEALED, AND ALL MATERIALS SHALL BE IN CONFORMANCE WITH UL 181A OR UL 181B AND ARE INSTALLED PER MANUFACTURER'S INSTRUCTIONS.
3. SECTION 701.4.2.2 (MANDATORY): BUILDING CAVITIES SHALL NOT BE USED AS SUPPLY DUCTS.
4. SECTION 701.4.2.3 (MANDATORY): DUCT SIZING SHALL BE SIZED IN ACCORDANCE WITH ACCA MANUAL D OR EQUIVALENT.
5. SECTION 701.4.3.2 (MANDATORY): AIR SEALING AND INSULATION SHALL BE CONFIRMED BY EITHER THE BLOWER DOOR TESTING PROCEDURE OR THE VISUAL INSPECTION PROCEDURE AS EXPLAINED IN THE NGBS SCORECARD. ALL DUCTWORK TO BE SEALED WITH MASTIC.
6. SECTION 702.2.1 (MANDATORY FOR PERFORMANCE PATH ONLY): A DOCUMENTED ANALYSIS USING SOFTWARE IN ACCORDANCE WITH ICC IECC SECTION R405 OR C407.2-C407.5 REQUIREMENTS SHALL BE USED TO ENSURE THAT ENERGY EFFICIENT FEATURES ARE IMPLEMENTED TO ACHIEVE ENERGY COST PERFORMANCE.
7. SECTION 703.3 (HVAC EQUIPMENT EFFICIENCY OPTIONS INCLUDED IN THIS PROJECT): REFER TO NGBS SCORECARD FOR PROJECT-SPECIFIC DETAILS.
8. SECTION 703.4 (DUCT SYSTEM OPTIONS INCLUDED IN THIS PROJECT): REFER TO NGBS SCORECARD FOR PROJECT-SPECIFIC DETAILS.
9. SECTION 705.4 (MECHANICAL OPTION INCLUDED IN THIS PROJECT): PROVIDE A RETURN OR TRANSFER GRILLE IN EACH ROOM WITH A DOOR. THIS EXCLUDES BATHROOMS, KITCHENS, CLOSETS, PANTRIES, AND LAUNDRY ROOMS.
10. SECTION 705.5.2 (PERFORMANCE OPTION INCLUDED IN THIS PROJECT): CONFIRM STARTUP CHECKLIST REQUIREMENTS PER NGBS ITEMS (1)-(6).
11. SECTION 705.6.2.1 (INSTALLATION AND PERFORMANCE OPTIONS INCLUDED IN THIS PROJECT): THIRD PARTY HVAC INSPECTIONS PER REQUIREMENTS OF NGBS ITEMS (1)-(2).
12. SECTION 706.6.2.2 (AIRFLOW TESTING OPTION INCLUDED IN THIS PROJECT): PROVIDE COMPLETE TESTING AND BALANCING REPORT REQUIREMENTS PER NGBS ITEMS (1)-(2).
13. SECTION 901 (GAS BURNING APPLIANCE OPTIONS INCLUDED IN THIS PROJECT): REFER TO NGBS SCORECARD FOR MANDATORY AND OPTIONAL PROJECT-SPECIFIC REQUIREMENTS IN THIS SECTION.
14. SECTION 902.1.1(1) (MANDATORY SPOT VENTILATION): BATHROOMS SHALL BE VENTED TO THE OUTDOORS AT A MINIMUM RATE OF 50 CFM INTERMITTENTLY OR 20 CFM CONTINUOUSLY.
15. SECTION 902.1.1(2) (MANDATORY SPOT VENTILATION): CLOTHES DRYERS BE VENTED TO THE OUTDOORS.
16. SECTION 902.1.4(1) (ENERGY STAR OPTION INCLUDED IN THIS PROJECT): BATHROOM EXHAUST FANS SHALL BE ENERGY STAR RATED.
17. SECTION 902.2.3 (MERV RATING OPTION INCLUDED IN THIS PROJECT): MECHANICAL SYSTEMS TO USE A MINIMUM OF MERV 8 FILTERS IN RESIDENTIAL UNITS AND ALL COMMON AREA UNITS. MECHANICAL EQUIPMENT SHALL BE ABLE TO ACCOMMODATE ADDITIONAL PRESSURE DROP.
18. SECTION 902.3 (MANDATORY RADON CONTROL): BUILDINGS LOCATED IN RADON ZONE 1 SHALL HAVE A RADON SYSTEM INSTALLED.
19. SECTION 1002.1(3) (MANDATORY DOCUMENTATION): WARRANTY, OPERATION MANUALS, AND MAINTENANCE INSTRUCTIONS FOR ALL MECHANICAL EQUIPMENT SHALL BE PROVIDED BY CONTRACTOR.
20. SECTION 1003.1(4) (RECORD DRAWINGS OPTION INCLUDED IN THIS PROJECT): MECHANICAL RECORD DRAWINGS SHALL BE PROVIDED BY CONTRACTOR.
22. BATT INSULATION MUST BE GRADE 1. EXTERIOR WALL BATTS MUST FILL CAVITY COMPLETELY.
23. BLOWER DOOR TEST NEED TO BE 5.00 ACH50 OR LESS.
24. ALL OPTIONAL NGBS POINTS BEYOND THE ITEMS SHOWN ABOVE SHALL BE PROVIDED AS REQUIRED BY THE NGBS SCORECARD. THE NGBS SCORECARD SHOULD BE CONSIDERED PART OF THE CONSTRUCTION DOCUMENT PACKAGE.
25. PROJECT IS AN AFFORDABLE HOUSING PROJECT FUNDED BY FHFC RFA#2024-306, SEE A0.3a FOR ADDITIONAL REQUIREMENTS THAT MUST BE MET.

ENERGY CALC VALUES

ROOF:	R-38
WALLS:	R-7.1
WINDOWS:	
SHGC:	0.25
U-VALUE:	U-0.4
VLT:	0.50
DOORS:	R-2.5/5.88
FLOORS:	R-N/A

INSULATION VALUES

MATERIAL	R-VALUE (≤ 3 STORY)	R-VALUE (≥ 4 STORY)
DUCTWORK (WITHIN BUILDING ENVELOPE)	R-6	R-4.2
DUCTWORK (WITHIN ATTIC)	R-8	R-6
OUTSIDE AIR DUCTWORK	R-6	R-6

NOTE:
THIS PROJECT HAS BEEN DESIGNED TO MEET ENERGY EFFICIENCY REQUIREMENTS. ALL MATERIALS USED IN THE CONSTRUCTION OF THIS PROJECT MUST MEET OR EXCEED THE MINIMUM VALUES NOTED PER THE LATEST ADOPTED EDITION OF THE FLORIDA BUILDING CODE, NGBS REQUIREMENTS, AND FLORIDA ENERGY CODE.

NOTE

ABBREVIATIONS, GENERAL NOTES AND SYMBOLS ON THIS MECHANICAL SHEET ARE FOR GENERAL REFERENCE PURPOSES ONLY. ALL OF THESE ABBREVIATIONS, GENERAL NOTES AND SYMBOLS MAY NOT BE USED FOR THIS PROJECT.

LAFATE WILSON
architects

1030 arlington ave n, st petersburg fl 33705
(727) 490-9483
studio@lafatewilson.com

THE ARCHITECT'S COMMON LAW COPYRIGHT AND OTHER PROPERTY RIGHTS ARE HEREBY RESERVED IN THE IDEAS, DESIGNS, PLANS, DRAWINGS, AND SPECIFICATIONS SHALL NOT BE REPRODUCED OR CONVEYED IN ANY MANNER NOR ASSIGNED TO ANY THIRD PARTY WITHOUT FIRST OBTAINING THE EXPRESS WRITTEN PERMISSION OF THE ARCHITECT.

OLD MEMORIAL

13600 National Golf Dr
Tampa, FL 33626

no.	description	date
	PERMIT SET	04.24.26

M0.00

MECHANICAL SYMBOLS LEGEND

sheet size 24" x 36"

Reviewed for Code Compliance
With The Florida Building Code
ECS, Florida LLC
41-5640-BLD2 7/20/2026

Electrical Review - Roger Sanders PX651 - Reviewed - 7/14/2026
Mechanical Review - Roger Sanders PX651 - Reviewed - 7/14/2026
Plumbing Review - Roger Sanders PX651 - Reviewed - 7/14/2026
Fire Review - Jay Traina - NA to Private Provider - 7/16/2026
Building Review - Roger Sanders PX651 - Reviewed - 7/14/2026

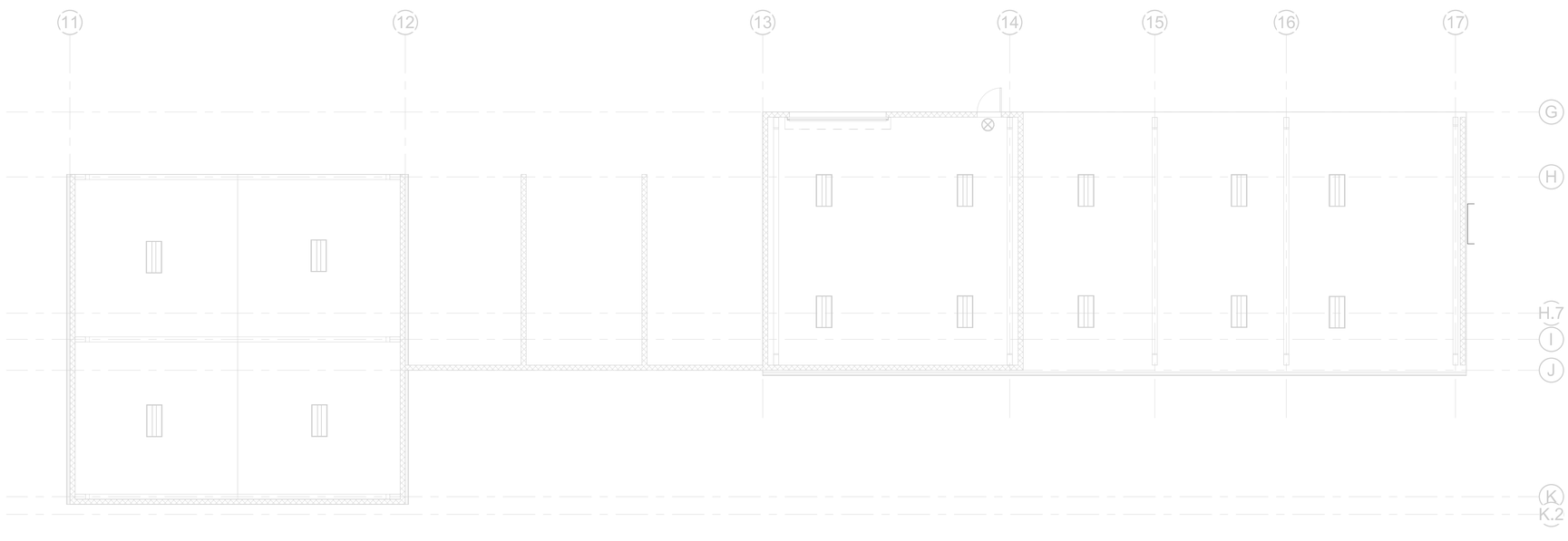

1 SAND AND CHEM STORAGE FLOOR PLAN - MECHANICAL
1/8" = 1'-0"

LAFATE WILSON
a r c h i t e c t s

1030 arlington ave n, st petersburg fl 33705
(727) 490-9483
studio@lafatewilson.com

THE ARCHITECT'S COMMON LAW COPYRIGHT AND OTHER PROPERTY RIGHTS ARE HEREBY RESERVED IN THE IDEAS, DESIGNS, PLANS, DRAWINGS, AND SPECIFICATIONS SHALL NOT BE REPRODUCED OR CONVEYED IN ANY MANNER NOR ASSIGNED TO ANY THIRD PARTY WITHOUT FIRST OBTAINING THE EXPRESS WRITTEN PERMISSION OF THE ARCHITECT.

OLD MEMORIAL

13600 National Golf Dr
Tampa, FL 33626

no.	description	date
	PERMIT SET	04.24.26

M1.02.1

BUILDING 2 FIRST FLOOR PLAN - MECHANICAL

sheet size 24" x 36"

Reviewed for Code Compliance
With The Florida Building Code
ECS, Florida LLC
41-5640-BLD2 7/20/2026

Electrical Review - Roger Sanders PX651 - Reviewed - 7/14/2026
Mechanical Review - Roger Sanders PX651 - Reviewed - 7/14/2026
Plumbing Review - Roger Sanders PX651 - Reviewed - 7/14/2026
Fire Review - Jay Traina - NA to Private Provider - 7/16/2026
Building Review - Roger Sanders PX651 - Reviewed - 7/14/2026

DX SPLIT SYSTEM - CONDENSING UNIT SCHEDULE (HEAT PUMP)

UNIT NO.	SECTION BASED ON		SERVING	UNIT DATA				CONDENSER FAN MOTOR				COMPRESSOR DATA						UNIT ELECTRIC DATA					NOTES
	MANUFACTURER	MODEL		GROSS CAP. (MBH)	EER / (SEER2)	COND. EAT F	REFRIG TYPE	QTY	HP (EACH)	VOLT	PH	QTY	STAGES	VOLT	PH	RLA (EACH)	LRA (EACH)	VOLT	PH	FLA	MCA	MOCP	
CU-1.1	CARRIER	38AXQM08	AHU-1.1	90	(16.0)	95	R-454B	2	0.25	208	3	1	1	208	3	26.3	191	208	3	1.5	42	60	ALL

NOTES:
1.PROVIDE COMPLETE WITH PULL TYPE DISCONNECT SWITCH (PROVIDED BY DIVISION 16), TIME DELAY RELAY AND ANTI-SHORT CYCLE TIMER.
2.MOUNT AND SECURE CONDENSING UNITS PER DETAILS PROVIDED.

DX SPLIT SYSTEM - INDOOR UNIT SCHEDULE

UNIT NO.	SELECTION BASED ON		FAN DATA						COIL DATA							UNIT ELECTRICAL DATA					UNIT WEIGHT	NOTES
						MOTOR DATA						HOT GAS REHEAT COIL DATA		ELEC. HEATER DATA								
	MANUFACTURER	MODEL	TOTAL AIRFLOW (CFM)	OUTSIDE AIR (CFM)	EXT. STATIC P. (IN H20)	HP	VOLT	PH	NET COOLING CAPICITY (MBH)	NET SENSIBLE CAPICITY (MBH)	MAX CC LAT (°F) DB	HOT GAS REHEAT COIL	HOT GAS REHEAT COIL LAT (°F) DB	KW	LAT (DEG-F)	VOLT	PH	BLOWER MOTOR FLA	MCA	MOCP		
AHU-1.1	CARRIER	40RLQA08	3,000	350	0.5	2.4	208	3	90	82	75	NO	N/A	15	85	208	3	5.8	52.4	60	385	1-3

NOTES:
1. PROVIDE COMPLETE WITH 7-DAY PROGRAMMABLE THERMOSTAT WITH HUMIDISTAT.
2. ROUTE AND SIZE REFRIGERANT LINES PER MANUFACTURER'S REQUIREMENTS.
3. PROVIDE INTERNAL CIRCUIT BREAKER PROTECTION OPTION.
4. PROVIDE CONDENSATE OVERFLOW SWITCH SAFE-T SWITCH MODEL SS2 OR EQUIVALENT.
5. PROVIDE WITH MOTORIZED OUTSIDE AIR DAMPER. DAMPER TO BE INTERLOCKED WITH AHU AND BALANCED PER OUTSIDE AIR SCHEDULE.
6. UNIT SHALL BE PROVIDED WITH BI-POLAR IONIZATION AIR TREATMENT SYSTEM EQUAL TO "GPS-FC48-AC". DEVICE SHALL BE PLACED IN UNIT DOWNSTREAM OF FILTER BUT UPSTREAM OF COOILING COIL, OR PER MANUFACTURER'S INSTRUCTIONS FOR DUCT MOUNTED INSTALLATION. POWER WITH 120V POWER FOR UNIT. COORDINATE WITH MANUFACTURER OF EQUIPMENT, RTU AND ELECTRICAL CONTRACTOR. SEE GPS SCHEDULE FOR ADDITIONAL REQUIREMENTS.

DX SPLIT AIR HANDLING UNIT SCHEDULE

MARK	LOCATION SERVED	FAN					COOLING COIL			FILTERS			ELECTRIC HEATING COIL		SINGLE POINT UNIT ELEC. REQ'S		UNIT INFORMATION				NOTES
		TOTAL AIR FLOW (CFM)	OUTSIDE AIR FLOW (CFM)	EXT. STATIC PRESS. (IN.WG.)	DRIVE TYPE	HP	ENT. AIR TEMP. (F° DB/WB)	LEAVING AIR TEMP. (F° DB/WB)	TOTAL CAP. (BTUH)	TYPE	EFF. %	THICK	NO. OF ST.	TOTAL KW	VOLTAGE/ PHASE	SINGLE CIRCUIT MCA	SINGLE CIRCUIT MOCP	UNIT SIZE (H"xW"xD")	OP. WEIGHT (LBS.)	MANUFACTURER	MO. NUMBER	
AHU-4.1	LOCKER ROOM AREA	2000	-	0.5	DIR.	3/4	80.0/67.0	56.0/54.0	60,000	TH.AWAY	25%-30%	1"	1	7.5	208/1ø	51.6	60	59"x25"x22"	203	CARRIER	FG5ANBD60L	ALL
AHU-4.2	BREAK ROOM	1400	-	0.5	DIR.	3/4	80.0/67.0	56.0/54.0	42,000	TH.AWAY	25%-30%	1"	1	7.5	208/1ø	51.6	60	59"x25"x22"	203	CARRIER	FG5ANBD60L	ALL
AHU-4.3	BREAK ROOM	1600	-	0.5	DIR.	3/4	80.0/67.0	56.0/54.0	48,000	TH.AWAY	25%-30%	1"	1	7.5	208/1ø	51.6	60	59"x25"x22"	203	CARRIER	FG5ANBD60L	ALL
AHU-4.4	DORM	1200	-	0.5	DIR.	1/2	80.0/67.0	56.0/54.0	36,000	TH.AWAY	25%-30%	1"	1	6.0	208/1ø	40.6	45	54"x22"x22"	146	CARRIER	FG5ANXC36L	ALL
AHU-4.5	COMMON AREA	1200	-	0.5	DIR.	1/2	80.0/67.0	56.0/54.0	36,000	TH.AWAY	25%-30%	1"	1	6.0	208/1ø	40.6	45	54"x22"x22"	146	CARRIER	FG5ANXC36L	ALL
AHU-4.6	DORM	1200	-	0.5	DIR.	1/2	80.0/67.0	56.0/54.0	36,000	TH.AWAY	25%-30%	1"	1	6.0	208/1ø	40.6	45	54"x22"x22"	146	CARRIER	FG5ANXC36L	ALL

NOTES:
1. PROVIDE COMPLETE WITH 7-DAY PROGRAMMABLE THERMOSTAT/HUMIDISTAT (ECOBEE) AND REMOTE TEMPERATURE SENSORS AS SHOWN.
2. ROUTE AND SIZE REFRIGERANT LINES PER MANUFACTURER'S REQUIREMENTS.
3. PROVIDE INTERNAL CIRCUIT BREAKER PROTECTION OPTION.
4. PROVIDE CONDENSATE OVERFLOW SWITCH SAFE-T SWITCH MODEL SS2 OR EQUIVALENT.
5. PROVIDE WITH MOTORIZED OUTSIDE AIR DAMPER. DAMPER TO BE INTERLOCKED WITH AHU AND BALANCED PER OUTSIDE AIR SCHEDULE.
6. UNIT SHALL BE PROVIDED WITH BI-POLAR IONIZATION AIR TREATMENT SYSTEM EQUAL TO "GPS-FC48-AC". DEVICE SHALL BE PLACED IN UNIT DOWNSTREAM OF FILTER BUT UPSTREAM OF COOILING COIL, OR PER MANUFACTURER'S INSTRUCTIONS FOR DUCT MOUNTED INSTALLATION. POWER WITH 120V POWER FOR UNIT. COORDINATE WITH MANUFACTURER OF EQUIPMENT, RTU AND ELECTRICAL CONTRACTOR. SEE GPS SCHEDULE FOR ADDITIONAL REQUIREMENTS.

DX SPLIT CONDENSING UNIT SCHEDULE (HEAT PUMP)

MARK	LOCATION	COMPRESSOR			COND. FANS		ELECTRICAL								UNIT INFORMATION		MANUFACTURER	MODEL NUMBER	NOTES
		OUTDOOR DESIGN TEMP. (F°)	QTY.	CAP STEPS %	QTY.	NOM. HP	VOLT/ PHASE	COMP. RLA EACH	COND. FANS		MCA	MOCP	SEER2	HSPF2	UNIT SIZE (H"xW"xD")	OP. WEIGHT (LBS.)			
									QTY.	FLA (EA.)									
CU-4.1	GROUND	95°	1	100	1	1/4	208/1ø	23.7	1	1.50	31.1	50	15.2	7.8	28"x32"x32"	233	CARRIER	GH5SAN560	ALL
CU-4.2	GROUND	95°	1	100	1	1/4	208/1ø	23.7	1	1.50	31.1	50	15.5	7.8	28"x32"x32"	233	CARRIER	GH5SAN560	ALL
CU-4.3	GROUND	95°	1	100	1	1/4	208/1ø	23.7	1	1.50	31.1	50	15.5	7.8	28"x32"x32"	233	CARRIER	GH5SAN560	ALL
CU-4.4	GROUND	95°	1	100	1	1/4	208/1ø	22.4	1	1.40	29.4	50	15.5	7.8	28"x32"x32"	231	CARRIER	GH5SAN548	ALL
CU-4.5	GROUND	95°	1	100	1	1/4	208/1ø	22.4	1	1.40	29.4	50	15.5	7.8	28"x32"x32"	231	CARRIER	GH5SAN548	ALL
CU-4.6	GROUND	95°	1	100	1	1/4	208/1ø	22.4	1	1.40	29.4	50	15.5	7.8	28"x32"x32"	231	CARRIER	GH5SAN548	ALL

NOTES:
1. PROVIDE COMPLETE WITH PULL TYPE DISCONNECT SWITCH (PROVIDED BY DIVISION 16) TIME DELAY RELAY AND ANTI-SHORT CYCLE TIMER.
2. TOTAL DEVELOPED LINESET LENGTH, INCLUDING HORIZONTAL AND VERTICAL DISTANCE, TO BE VERIFIED WITH CONDENSING UNIT MANUFACTURER PRIOR TO PURCHASE. IF CONDENSING UNIT LOCATIONS EXCEED THE MANUFACTURER'S RECOMMENDED TOTAL LINESET LENGTH VERIFY THE MANUFACTURER HAS AN OPTION TO ALLOW FOR LONG LINESETS AND PROVIDE ACCESSORIES AS REQUIRED.
3. MOUNT AND SECURE CONDENSING UNITS PER DETAILS PROVIDED.

EXHAUST FAN SCHEDULE

MARK	MANUFACTURER	MODEL	SERVING	TYPE	CFM	EXTERNAL STATIC PRESSURE (IN. W.G.)	SONES	FAN RPM	MOTOR DATA				NOTES
									HP(WATTS)	RPM	VOLT	PH	
EF-1.1	GREENHECK	CSP-A510-VG	GRINDING ROOM	CABINET	500	0.5	0.8	1369	1/6	1800	120	1	1,2,3,7,8
EF-1.2	GREENHECK	SQ-A90	RESTROOMS	CABINET	70	0.5	0.8	900	(15)	1200	120	1	1,2,3,7,8
EF-1.3	GREENHECK	SQ-A90	RESTROOMS	CABINET	70	0.5	0.8	900	(15)	1200	120	1	1,2,3,7,8
EF-3.1	GREENHECK	BAER-36-03-0310	DRY STORAGE	WALL MOUNTED	550	0.5	29	1017	1.5	1200	120	1	1,2,3,7,8
EF-3.2	GREENHECK	BAER-36-03-0910	CHEMICAL STORAGE	WALL MOUNTED	1700	0.5	27	737	1	1200	120	1	1,2,3,7,8
EF-4.1	GREENHECK	CSP-A510-VG	RESTROOMS/LOCKER ROOM	INLINE	310	0.5	0.8	1144	1/6	1800	120	1	1,2,3,7,8
EF-4.2	GREENHECK	CSP-A510-VG	RESTROOMS/LOCKER ROOM	INLINE	300	0.5	0.8	1444	1/6	1800	120	1	1,2,3,7,8
EF-4.3	GREENHECK	SQ-A90	RESTROOMS	CABINET	70	0.5	0.8	900	(15)	1200	120	1	1,2,3,7,8

REMARKS:
1 PROVIDE WITH BACKDRAFT DAMPER
2 PROVIDE WITH DISCONNECT SWITCH
3 PROVIDE WITH SCR SPEED CONTROLLER OR POTENTIOMETER DIAL FOR ECM MOTORS.
4 PROVIDE WITH ROOF CURB
5 SPARK/EXPLOSION PROOF
6 PROVIDE WITH INSULATED HOUSING FOR SOUND CONTROL.
7 PROVIDE WITH VIBRATION ISOLATORS. HANG USING VIBRATION ISOLATION HANGERS
8 FAN SHALL TIE INTO RESTROOM LIGHT SWITCH/OCCUPANCY SENSOR.

GENERAL: 1. ALL ROOF MOUNTED FANS MUST HAVE A FLORIDA PRODUCT APPROVAL NUMBER.

VENTILATION REQUIREMENT SCHEDULE - OFFICE

SERVED BY	ROOM	SPACE TYPE	NO. OF PEOPLE	REQ'D CFM PER PERSON	SQ.FT. OF AREA	REQ'D CFM PER SQ.FT.	NO. OF PEOPLE/ 1000 SQ.FT. (DEFAULT VALUE)	CFM/ PERSON (DEFAULT VALUE)	TOTAL REQ'D CFM
AHU-4.1	CORRIDOR AREA	CORRIDORS	5	0	320	0.06	0	0	19
	LOCKER ROOM	NONE	10	0	424	0	0	0	0
	LOCKER/SHOWER	NONE	5	0	150	0	0	0	0
	MUD ROOM	MAIN ENTRY LOBBIES	5	5	256	0.06	10	11	41
							TOTAL REQ'D OA FOR AHU-4.1		60
							TOTAL PROVIDED OA FOR AHU-4.1		100
AHU-4.2	BREAK ROOM	BREAK ROOM	25	5	990	0.06	70	13	185
							TOTAL REQ'D OA FOR AHU-4.2		185
							TOTAL PROVIDED OA FOR AHU-4.2		200
AHU-4.3	BREAK ROOM	BREAK ROOM	25	5	990	0.06	70	13	185
	UTILITY	STORAGE ROOMS	4	0	130	0.12	0	0	16
	STORAGE	STORAGE ROOMS	4	0	160	0.12	0	0	19
							TOTAL REQ'D OA FOR AHU-4.3		220
							TOTAL PROVIDED OA FOR AHU-4.3		225
AHU-4.4	DORM 1	BEDROOM/LIVING ROOM	2	5	320	0.06	10	11	30
	DORM 2	BEDROOM/LIVING ROOM	2	5	320	0.06	10	11	30
	DORM 3	BEDROOM/LIVING ROOM	2	5	314	0.06	10	11	29
	DORM 4	BEDROOM/LIVING ROOM	2	5	314	0.06	10	11	29
	COMMON AREA	CORRIDORS	2	0	260	0.06	0	0	16
							TOTAL REQ'D OA FOR AHU-4.4		134
							TOTAL PROVIDED OA FOR AHU-4.4		150
AHU-4.5	COMMON AREA	LOBBIES	20	5	1045	0.06	150	5	163
							TOTAL REQ'D OA FOR AHU-4.5		163
							TOTAL PROVIDED OA FOR AHU-4.5		175
AHU-4.6	DORM 5	BEDROOM/LIVING ROOM	2	5	314	0.06	10	11	29
	DORM 6	BEDROOM/LIVING ROOM	2	5	314	0.06	10	11	29
	DORM 7	BEDROOM/LIVING ROOM	2	5	320	0.06	10	11	30
	DORM 8	BEDROOM/LIVING ROOM	2	5	320	0.06	10	11	30
	COMMON AREA	CORRIDORS	2	0	258	0.06	0	0	15
							TOTAL REQ'D OA FOR AHU-4.6		133
							TOTAL PROVIDED OA FOR AHU-4.6		150
							TOTAL REQUIRED		592
							TOTAL PROVIDED		450

NOTE:

REQUIRED OUTSIDE AIRFLOW (CFM) VALUES BASED ON FBCM 8TH ED. (2023) & ANSI/ASHRAE STANDARD 62.1.

BUILDING AIR BALANCE	
TOTAL OUTSIDE AIR	450
TOTAL EXHAUST AIR	170
TOTAL BUILDING PRESSURE	280

LAFATE WILSON
a r c h i t e c t s

1030 arlington ave n, st petersburg fl 33705
(727) 490-9483
studio@lafatewilson.com

THE ARCHITECT'S COMMON LAW COPYRIGHT AND OTHER PROPERTY RIGHTS ARE HEREBY RESERVED IN THE IDEAS, DESIGNS, PLANS, DRAWINGS, AND SPECIFICATIONS SHALL NOT BE REPRODUCED OR CONVEYED IN ANY MANNER NOR ASSIGNED TO ANY THIRD PARTY WITHOUT FIRST OBTAINING THE EXPRESS WRITTEN PERMISSION OF THE ARCHITECT.

OLD MEMORIAL

13600 National Golf Dr
Tampa, FL 33626

no.	description	date
	PERMIT SET	04.24.26

M4.01

SCHEDULES-
MECHANICAL

sheet size 24" x 36"

Reviewed for Code Compliance
With The Florida Building Code
ECS, Florida LLC
41-5640-BLD2 7/20/2026

Electrical Review - Roger Sanders PX651 - Reviewed - 7/14/2026
Mechanical Review - Roger Sanders PX651 - Reviewed - 7/14/2026
Plumbing Review - Roger Sanders PX651 - Reviewed - 7/14/2026
Fire Review - Jay Traina - NA to Private Provider - 7/16/2026
Building Review - Roger Sanders PX651 - Reviewed - 7/14/2026

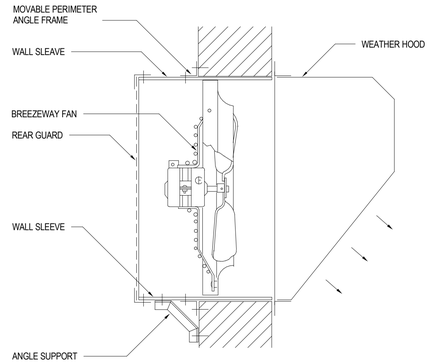

WALL MOUNTED BREEZEWAY FAN DETAIL | I

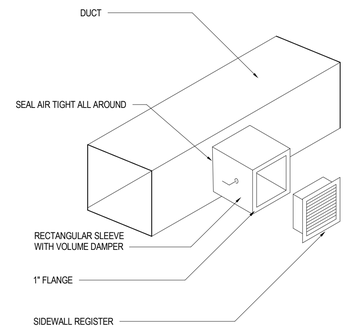

SIDEWALL GRILLE DUCT CONNECTION | F

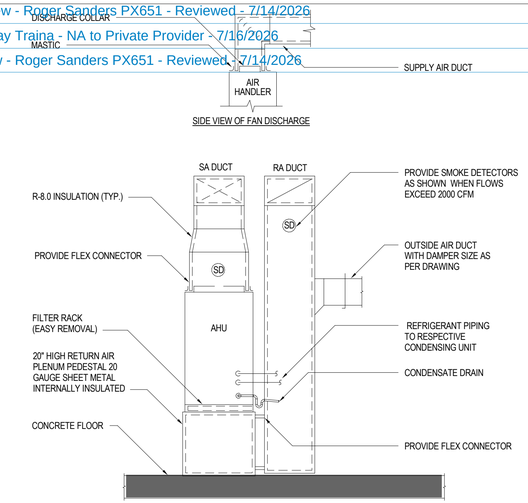

VERTICAL AIR HANDLER DIAGRAM | C

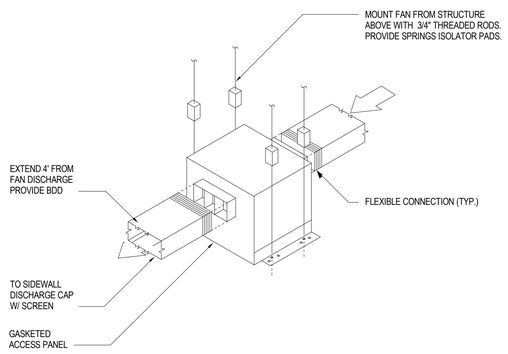

IN-LINE CEILING EXHAUST FAN DETAIL | H

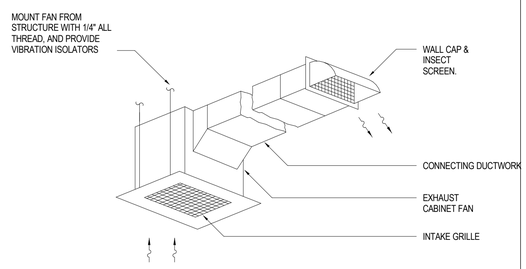

CEILING EXHAUST FAN DETAIL | E

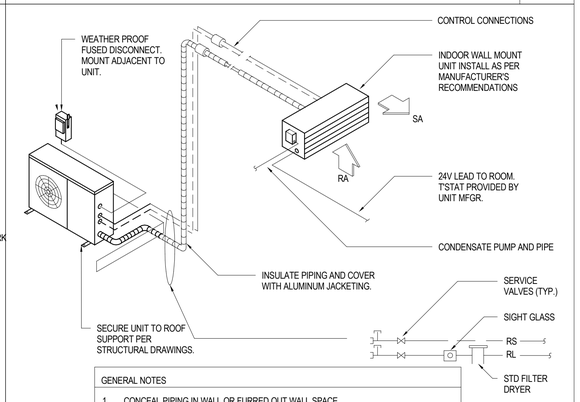

GENERAL NOTES

1. CONCEAL PIPING IN WALL OR FURRED OUT WALL SPACE.
2. PROVIDE LINE COVERS TO CONCEAL ANY EXPOSED PIPE WHERE PIPE CAN NOT BE CONCEALED ABOVE CEILING OR INSIDE WALL VERTICAL CHASE.
3. PROVIDE A DDC GATEWAY INTERFACE COMMUNICATION MODULE BETWEEN UNIT APPLICATION SPECIFIC CONTROLLER AND BUILDING LEVEL CONTROL SYSTEM
4. PROVIDE MANUFACTURES CONDENSATE PUMP

DUCTLESS AIR CONDITIONER UNIT DETAIL | B

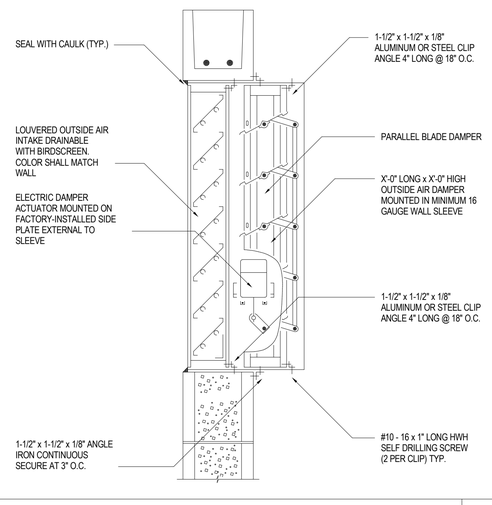

OUTSIDE AIR LOUVER W/MOTORIZED DAMPER | G

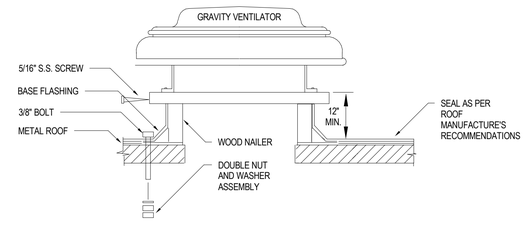

GENERAL NOTES

1. ANCHOR CURB TO ROOF STRUCTURE WITH 3/8" BOLTS, DOUBLE NUT AND WASHER ASSEMBLY. PROVIDE BOLTS AT 12" ON CENTER OR A MINIMUM OF 3 PER SIDE
2. ANCHOR GRAVITY VENTILATOR TO CURB WITH 5/16" S.S. SCREWS THROUGH WOOD NAILER AT 12" ON CENTER OR A MINIMUM OF 3 PER SIDE
3. COORDINATE CURB HEIGHT WITH ROOF INSULATION. PROVIDE 12" MINIMUM HEIGHT ABOVE
4. INSTALL AS PER ROOF MANUFACTURER'S RECOMMENDATIONS, FPA AND/OR FBC - MIAMI DADE NOA NUMBER RATING DETAILS.
5. PROVIDE ROOF CURBS CONFORMING TO PITCHED ROOF AS NECESSARY.
6. INSTALL AS ROOF MANUFACTURER'S RECOMMENDATIONS AND DETAILS TO MEET ALL WIND LOADING REQUIREMENTS. ON ANY DISCREPANCIES BETWEEN THIS DETAIL AND THE MANUFACTURE'S INSTALLATION INSTRUCTIONS, THE MANUFACTURE'S WIND LOADING DETAILS SHALL BE USED.
7. PRODUCT SHALL BE FLORIDA PRODUCT APPROVED.

GRAVITY VENTILATOR DETAIL | D

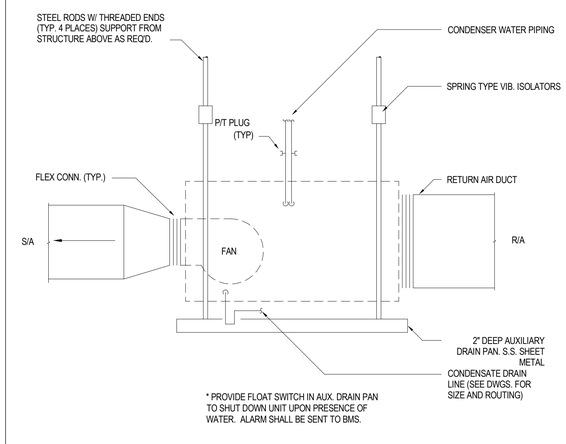

* PROVIDE FLOAT SWITCH IN AUX. DRAIN PAN TO SHUT DOWN UNIT UPON PRESENCE OF WATER. ALARM SHALL BE SENT TO BMS.

HORIZONTAL AHU DETAIL | A

LAFATE WILSON
architects

1030 arlington ave n, st petersburg fl 33705
(727) 490-9483
studio@lafatewilson.com

THE ARCHITECT'S COMMON LAW COPYRIGHT AND OTHER PROPERTY RIGHTS ARE HEREBY RESERVED IN THE IDEAS, DESIGNS, PLANS, DRAWINGS, AND SPECIFICATIONS SHALL NOT BE REPRODUCED OR CONVEYED IN ANY MANNER NOR ASSIGNED TO ANY THIRD PARTY WITHOUT FIRST OBTAINING THE EXPRESS WRITTEN PERMISSION OF THE ARCHITECT.

OLD MEMORIAL

13600 National Golf Dr
Tampa, FL 33626

no.	description	date
	PERMIT SET	04.24.26

M6.01

DETAILS - MECHANICAL

sheet size 24" x 36"

Reviewed for Code Compliance
With The Florida Building Code
ECS, Florida LLC
41-5640-BLD2 7/20/2026

Electrical Review - Roger Sanders PX651 - Reviewed - 7/14/2026
Mechanical Review - Roger Sanders PX651 - Reviewed - 7/14/2026
Plumbing Review - Roger Sanders PX651 - Reviewed - 7/14/2026
Fire Review - Jay Traina - NA to Private Provider - 7/16/2026
Building Review - Roger Sanders PX651 - Reviewed - 7/14/2026

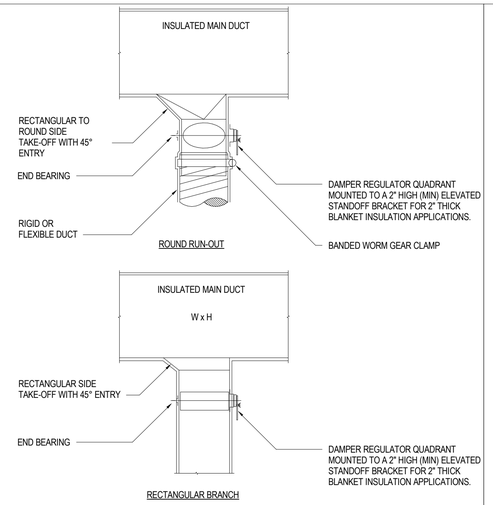

BRANCH TAKE-OFFS | I

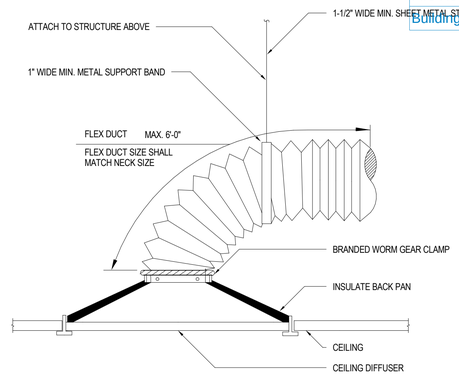

TYPICAL SUPPLY DIFFUSER CONNECTION | F

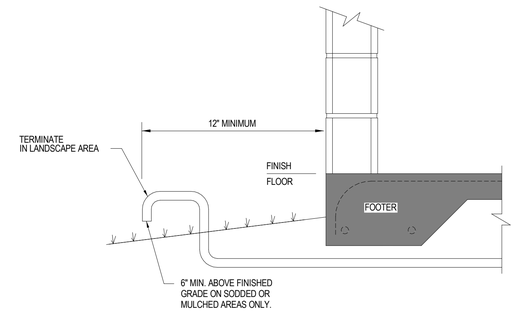

CONDENSATE DISCHARGE TERMINATION DETAIL | C

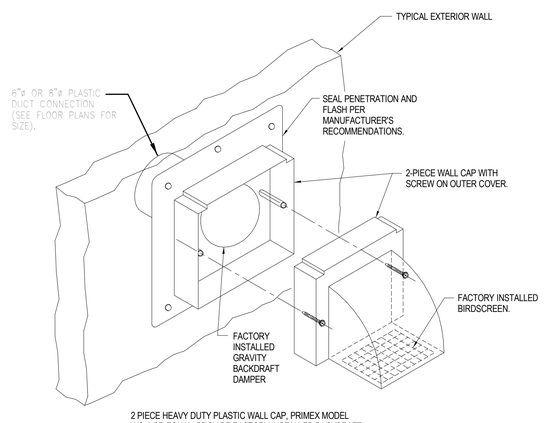

2 PIECE HEAVY DUTY PLASTIC WALL CAP, PRIMEX MODEL WC-4 OR EQUAL. PROVIDE FACTORY INSTALLED BACKDRAFT DAMPER FOR DRYER VENT AND RESTROOM EXHAUST FANS. REMOVE BACKDRAFT DAMPER FOR USE AS OUTSIDE AIR INTAKE. FOR DRYER APPLICATIONS USE THE NO BIRD SCREEN (NS) MODEL. PAINT TO OWNERS SPEC.

TYPICAL WALL CAP DETAIL | H

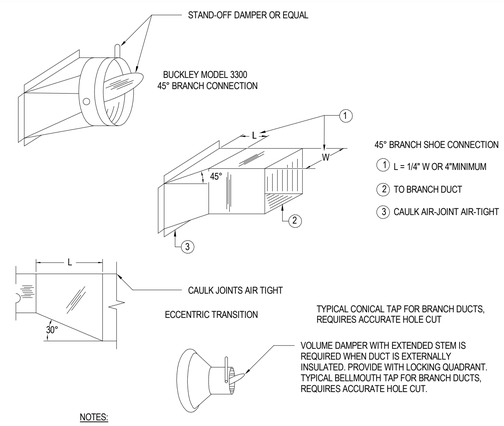

NOTES:

1. CROWN 3210-DS2 OR EQUIVALENT. (3300-DS2 FOR 45 DEG TAKE-OFF).
2. WINGNUT ON SHAFT IS UNACCEPTABLE. WINGNUT MUST RIDE ON LOCKING QUADRANT.
3. GASKET MATERIAL ON OUTBOARD FLANGE.
4. MUST MEET SMACNA GAUGE STANDARDS AND 2" W.G. PRESSURE.
5. CONTINUOUS WELD LONGITUDINAL SEAM FOR NO LEAKAGE AT 2" W.G. STATIC PRESSURE.

TAKEOFF FITTING DETAIL | E

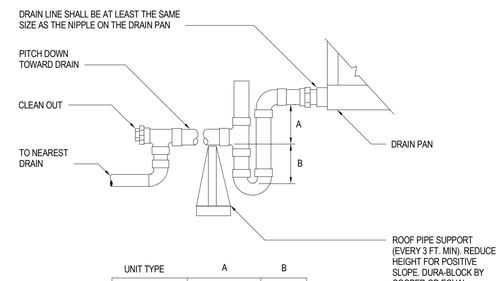

UNIT TYPE	A	B
DRAW THRU	2" (50 MM) PLUS X	X
BLOW THRU	1" (25 MM) PLUS X	2X

WHERE X = STATIC PRESSURE IN PAN

AIR HANDLING UNIT DRAIN TRAP DETAIL | B

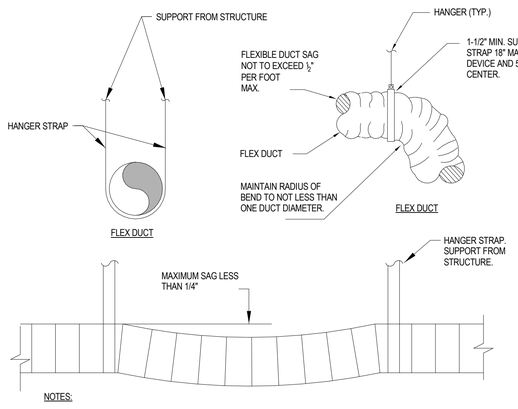

NOTES:

MAXIMUM SPACING BETWEEN HANGER LOCATIONS SHALL BE 5'-0".

STRAPS SHALL BE MINIMUM 1-1/2".

REFER TO SMACNA AND FLORIDA MECHANICAL CODE FOR ADDITIONAL REQUIREMENTS.

FLEX DUCT HANGER DETAIL | G

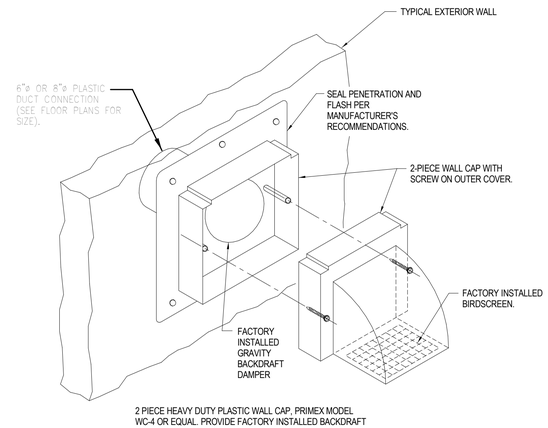

2 PIECE HEAVY DUTY PLASTIC WALL CAP, PRIMEX MODEL WC-4 OR EQUAL. PROVIDE FACTORY INSTALLED BACKDRAFT DAMPER FOR DRYER VENT AND RESTROOM EXHAUST FANS. REMOVE BACKDRAFT DAMPER FOR USE AS OUTSIDE AIR INTAKE. FOR DRYER APPLICATIONS USE THE NO BIRD SCREEN (NS) MODEL. PAINT TO OWNERS SPEC.

TYPICAL WALL CAP DETAIL | D

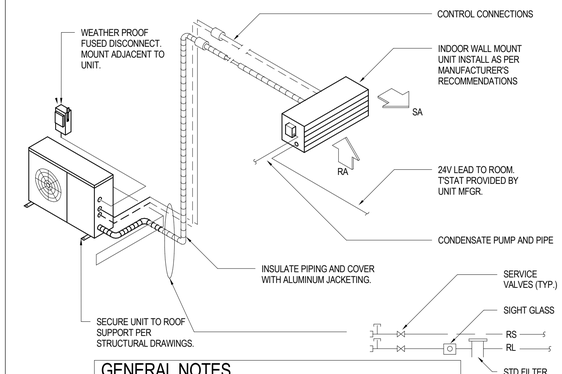

GENERAL NOTES

1. CONCEAL PIPING IN WALL OR FURRED OUT WALL SPACE.
2. PROVIDE LINE COVERS TO CONCEAL ANY EXPOSED PIPE WHERE PIPE CAN NOT BE CONCEALED ABOVE CEILING OR INSIDE WALL VERTICAL CHASE.
3. PROVIDE A DDC GATEWAY INTERFACE COMMUNICATION MODULE BETWEEN UNIT APPLICATION SPECIFIC CONTROLLER AND BUILDING LEVEL CONTROL SYSTEM
4. PROVIDE MANUFACTURES CONDENSATE PUMP

DUCTLESS AIR CONDITIONER UNIT DETAIL | A

LAFATE WILSON
architects

1030 arlington ave n, st petersburg fl 33705
(727) 490-9483
studio@lafatewilson.com

THE ARCHITECT'S COMMON LAW COPYRIGHT AND OTHER PROPERTY RIGHTS ARE HEREBY RESERVED IN THE IDEAS, DESIGNS, PLANS, DRAWINGS, AND SPECIFICATIONS SHALL NOT BE REPRODUCED OR CONVEYED IN ANY MANNER NOR ASSIGNED TO ANY THIRD PARTY WITHOUT FIRST OBTAINING THE EXPRESS WRITTEN PERMISSION OF THE ARCHITECT.

OLD MEMORIAL

13600 National Golf Dr
Tampa, FL 33626

no.	description	date
	PERMIT SET	04.24.26

M6.02

DETAILS - MECHANICAL

sheet size 24" x 36"

Reviewed for Code Compliance
With The Florida Building Code
ECS, Florida LLC
41-5640-BLD2 7/20/2026

Electrical Review - Roger Sanders PX651 - Reviewed - 7/14/2026
Mechanical Review - Roger Sanders PX651 - Reviewed - 7/14/2026
Plumbing Review - Roger Sanders PX651 - Reviewed - 7/14/2026
Fire Review - Jay Traina - NA to Private Provider - 7/16/2026
Building Review - Roger Sanders PX651 - Reviewed - 7/14/2026

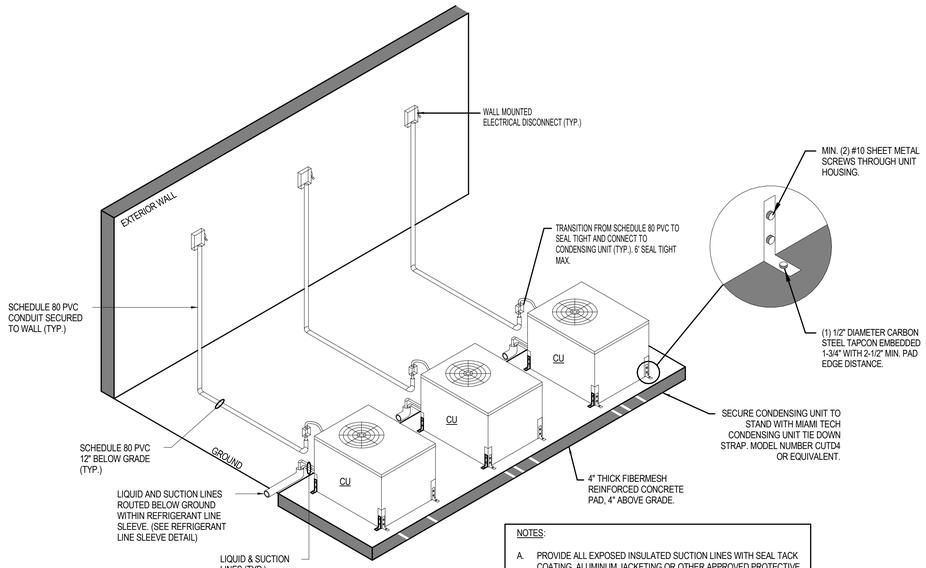

NOTES:

A. PROVIDE ALL EXPOSED INSULATED SUCTION LINES WITH SEAL TACK COATING, ALUMINUM JACKETING OR OTHER APPROVED PROTECTIVE MEANS.
B. CONTROL THERMOSTAT WIRING TO BE WRAPPED NEATLY AROUND LIQUID LINE AND INSULATED SUCTION LINE.

GROUND MOUNTED CONDENSING UNIT PIPING DETAIL (REFRIGERANT AND ELECTRICAL BELOW GRADE. | C

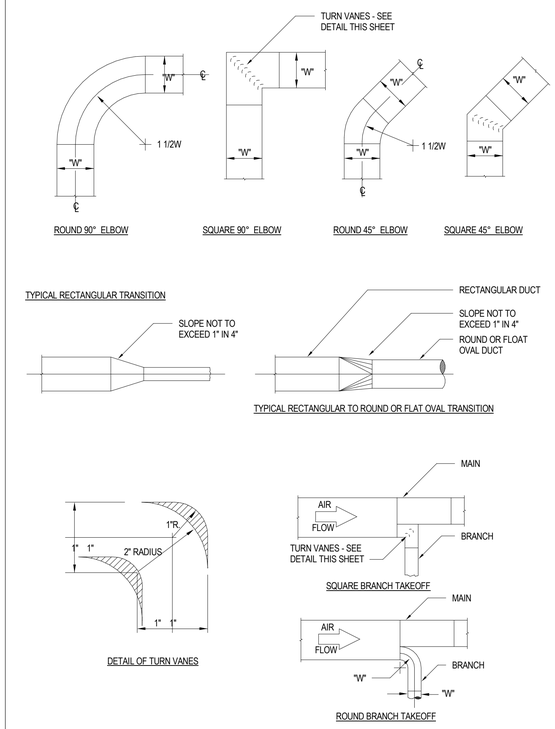

DUCT FITTINGS DETAIL | B

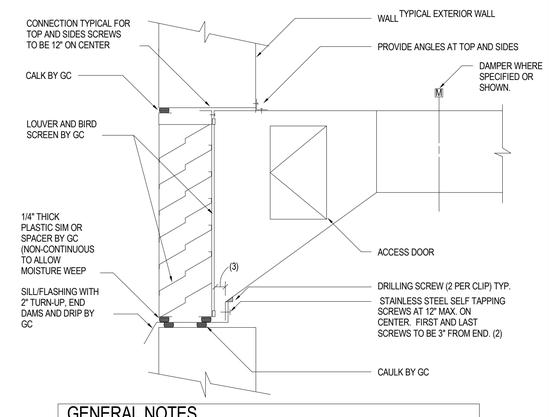

GENERAL NOTES

1. PLENUM CONNECTION TO LOUVER IS SIMILAR.
2. BOTTOM OF DUCT TO BE COMPLETELY OVERLAPPED WITH TURN-UP. DRILL TURN-UP PRIOR TO INSTALLING SELF TAPPING SCREW TO ENSURE DUCT IS DRAWN TIGHT TO TURN-UP.
3. MINIMUM 1" SCREW CONNECTION CLEARANCE.

DUCT CONNECTION TO LOUVER | A

LAFATE WILSON
architects

1030 arlington ave n, st petersburg fl 33705
(727) 490-9483
studio@lafatewilson.com

THE ARCHITECT'S COMMON LAW COPYRIGHT AND OTHER PROPERTY RIGHTS ARE HEREBY RESERVED IN THE IDEAS, DESIGNS, PLANS, DRAWINGS, AND SPECIFICATIONS SHALL NOT BE REPRODUCED OR CONVEYED IN ANY MANNER NOR ASSIGNED TO ANY THIRD PARTY WITHOUT FIRST OBTAINING THE EXPRESS WRITTEN PERMISSION OF THE ARCHITECT.

OLD MEMORIAL

13600 National Golf Dr
Tampa, FL 33626

no.	description	date
	PERMIT SET	04.24.26

M6.03

DETAILS - MECHANICAL

sheet size 24" x 36"

Reviewed for Code Compliance
With The Florida Building Code
ECS, Florida LLC
41-5640-BLD2 7/20/2026

Electrical Review - Roger Sanders PX651 - Reviewed - 7/14/2026
Mechanical Review - Roger Sanders PX651 - Reviewed - 7/14/2026
Plumbing Review - Roger Sanders PX651 - Reviewed - 7/14/2026
Fire Review - Jay Traina - NA to Private Provider - 7/16/2026
Building Review - Roger Sanders PX651 - Reviewed - 7/14/2026

System No. F-C-8014

F Rating — 1 Hr
T Rating — 0 Hr

FC 8014

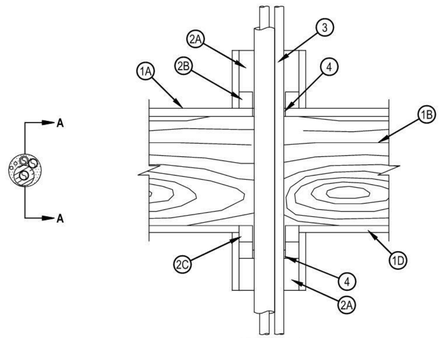

SECTION A-A

1. Floor — Ceiling Assembly — The 1 hr fire-rated wood joist floor-ceiling assembly shall be constructed of the materials and in the manner specified in the individual L500 Series Floor-Ceiling Designs in the UL Fire Resistance Directory, as summarized below:
   A. Floor System — Lumber or plywood subfloor with finish floor of lumber, plywood or Floor Topping Mixture* as specified in individual Floor-Ceiling Design. Max diam of floor opening is 3 in.
   B. Joists — Nom 10 in. deep (or deeper) lumber, steel or combination lumber and steel joists, trusses or Structural Wood Members* with bridging as required and with end firestopped.
   C. Gypsum Board* — Nom 5/8 in. thick as specified in the individual Floor-Ceiling Design. Max diam of openings is 3 in.
2. Chase Wall — (Optional) - The through penetrant (Item 3) may be routed through a 1 hr fire-rated single, double or staggered wood stud/gypsum wallboard chase wall shall be constructed of the materials and in the manner specified in the individual U300 Series Wall and Partition Designs in the UL Fire Resistance Directory and shall include the following construction features:
   A. Studs — Nom 2 by 6 in. or double nom 2 by 4 in. lumber studs.
   B. Sole Plate — Nom 2 by 6 in. or parallel 2 by 4 in. lumber plates, tightly butted.
   C. Top Plate — The double top plate shall consist of two nom 2 by 6 in. or two sets of parallel 2 by 4 in. lumber plates, tightly butted. Max diam of openings is 3 in.
   D. Gypsum Board* — Thickness, type, number of layers and fasteners shall be as specified in the individual Wall and Partition Design.

HILTI
Hilti Firestop Systems

Reproduced by HILTI, Inc. Courtesy of Underwriters Laboratories, Inc. September 18, 2007

CLASSIFIED UL

System No. F-C-8014

F Rating — 1 Hr
T Rating — 0 Hr

FC 8014

3. Through-Penetrants — Pipes, conduits, tubing and cables to be bundled and centered in the opening. The space between penetrants and the periphery of the opening shall be min 1/4 in. to max 3/4 in. Penetrants to be rigidly supported on both sides of the floor-ceiling assembly.
   A. Metallic Pipes — A max of two metallic pipes, conduits or tubing, (one 3/4 in. diam and one 1/2 in. diam) to be installed within the firestop system. The following types and sizes of metallic pipes, conduits or tubing may be used:
   A1. Steel Pipe — Nom 3/4 in. diam (or smaller) Schedule 5 (or heavier) steel pipe.
   A2. Conduit — Nom 3/4 in. diam (or smaller) steel electrical metallic tubing or steel conduit.
   A3. Copper Tubing — Nom 3/4 in. diam (or smaller) Type L (or heavier) copper tubing.
   A4. Copper Pipe — Nom 3/4 in. diam (or smaller) Regular (or heavier) copper pipe.
   B. Nonmetallic Pipes — A max of one nonmetallic pipe to be installed within the firestop system. The following types and sizes of nonmetallic pipes may be used:
   B1. Polyvinyl Chloride (PVC) Pipe — Nom 1/2 in. diam (or smaller) Schedule 40 solid core PVC pipe for use in closed (process or supply) or vented (drain, waste or vent) piping systems.
   B2. Chlorinated Polyvinyl Chloride (CPVC) Pipe — Nom 1/2 in. diam (or smaller) SDR17 CPVC pipe for use in closed (process or supply) or vented (drain, waste or vent) piping systems.
   C. Cables — A max of two 4/C No. 18 AWG (or smaller) thermostat cables with PVC insulation and PVC/nylon jacketing material.
   D. Tube Insulation — Plastic+ — Nom 1/2 in. thick acrylonitrile butadiene/polyvinyl chloride (AB/PVC) flexible foam furnished in the form of tubing. Tube insulation to be installed on a max of one metallic pipe or tubing.
   See Plastics+ (QMFZ2) category in the Plastics Recognized Component Directory for names of manufacturers. Any Recognized Component tube insulation material meeting the above specifications and having a UL 94 Flammability Classification of 94-5VA may be used.
4. Fill, Void or Cavity Material* — Sealant — Min 3/4 in. thickness of fill material applied within the annulus, flush with top surface of floor or sole plate. Min 5/8 in. thickness of fill material applied within the annulus, flush with the bottom surface of the ceiling or lower top plate.
   HILTI CONSTRUCTION CHEMICALS, DIV OF
   HILTI INC — FS — ONE Sealant

*Bearing the UL Classification Marking
+Bearing the UL Recognized Component Mark

HILTI
Hilti Firestop Systems

Reproduced by HILTI, Inc. Courtesy of Underwriters Laboratories, Inc. September 18, 2007

CLASSIFIED UL

System No. F-C-7013

CLASSIFIED UL C US
Classified by Underwriters Laboratories, Inc., to UL 1479 and CAN/ULC-S115

ANSI/UL1479 (ASTM E814)	CAN/ULC S115
F Rating — 1 Hr	F Rating — 1 Hr
T Rating — 0 Hr	FT Rating — 0 Hr
	FH Rating — 1 Hr
	FTH Rating — 0 Hr

FC 7013

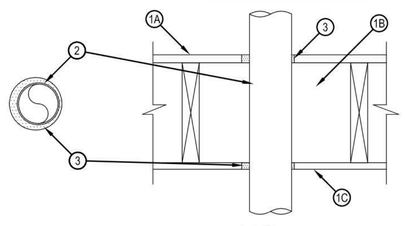

SECTION A-A

1. Floor-Ceiling Assembly — The 1 hr fire-rated solid or trussed lumber joist floor-ceiling assembly shall be constructed of the materials and in the manner specified in the individual L500 Series Floor-Ceiling Designs in the UL Fire Resistance Directory. The general construction features of the floor-ceiling assembly are summarized below:
   A. Flooring System — Lumber or plywood subfloor with finish floor of lumber, plywood or Floor Topping Mixture* as specified in the individual Floor-Ceiling Design. Max diam of opening shall be 5-1/4 in. (133 mm).
   B. Wood Joist* — Nom 10 in. (254 mm) deep (or deeper) lumber, steel or combination lumber and steel joists, trusses or Structural Wood Members* with bridging as required and with ends firestopped.
   C. Gypsum Board* — Nom 4 ft (1.2 m) wide by 5/8 in. (16 mm) thick as specified in the individual Floor-Ceiling Design. Max diam of opening shall be 5-1/4 in. (133 mm).
1.1 Chase Wall — (Not shown. Optional) The through penetrants (Item 2) may be routed through a 1 hr fire-rated single, double or staggered wood stud/gypsum wallboard chase wall having a fire rating consistent with that of the floor-ceiling assembly. The chase wall shall be constructed of the materials and in the manner specified in the individual U300 Series Wall and Partition Designs in the UL Fire Resistance Directory and shall include the following construction features:
   A. Studs — Nom 2 by 6 in. (51 by 152 mm) lumber or double nom 2 by 4 in. (51 by 102 mm) lumber studs.
   B. Sole Plate — Nom 2 by 6 in. (51 by 152 mm) lumber or parallel 2 by 4 in. (51 by 102 mm) lumber plates, tightly butted. Max diam of opening shall be 5-1/4 in.
   C. Top Plate — The double top plate shall consist of two nom 2 by 6 in. (51 by 152 mm) lumber plates or two sets of nom 2 by 4 in. (51 by 102 mm) lumber plates tightly butted. Max diam of opening is 5-1/4 in. (133 mm).
   D. Gypsum Board* — Thickness, type, number of layers and fasteners shall be as specified in Individual Wall and Partition Design.

HILTI
Hilti Firestop Systems

Reproduced by HILTI, Inc. Courtesy of Underwriters Laboratories, Inc. January 20, 2015

System No. F-C-7013

FC 7013

2. Steel Duct — Nom 4 in. (102 mm) diam (or smaller) No. 28 gauge (or heavier) steel duct to be installed either concentrically or eccentrically within the firestop system. The annular space between duct and periphery of opening shall be min of 1/4 in. (6 mm) to max 3/4 in. (19 mm). Steel duct to be rigidly supported on both sides of floor-ceiling assembly.
3. Fill, Void or Cavity Materials*-Sealant — Min 3/4 in. (19 mm) thickness of sealant applied within the annular space, flush with top surface of floor or sole plate. Min 5/8 in. (16 mm) thickness of sealant applied within annular space, flush with bottom surface of gypsum board or lower top plate.
   HILTI CONSTRUCTION CHEMICALS, DIV OF HILTI INC — FS-ONE Sealant or FS-ONE MAX Intumescent Sealant
* Indicates such products shall bear the UL or cUL Certification Mark for jurisdictions employing the UL or cUL Certification (such as Canada), respectively.

HILTI
Hilti Firestop Systems

Reproduced by HILTI, Inc. Courtesy of Underwriters Laboratories, Inc. January 20, 2015

System No. W-L-7017

CLASSIFIED UL C US
Classified by Underwriters Laboratories, Inc., to UL 1479 and CAN/ULC-S115

ANSI/UL1479 (ASTM E814)	CAN/ULC S115
F Rating — 1 Hr	F Rating — 1 Hr
T Rating — 0 Hr	FT Rating — 0 Hr
	FH Rating — 1 Hr
	FTH Rating — 0 Hr

WL 7017

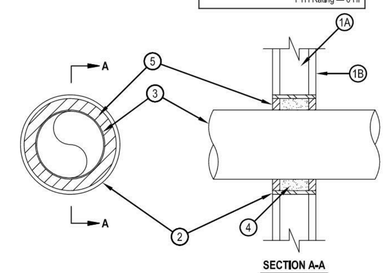

SECTION A-A

1. Wall Assembly — The fire-rated gypsum wallboard/stud wall assembly shall be constructed of the materials and in the manner described in the individual U300, U400, V400 or W400 Series Wall and Partition Designs in the UL Fire Resistance Directory and shall include the following construction features:
   A. Studs — Wall framing may consist of either wood studs or steel channel studs. Wood studs to consist of nom 2 by 4 in. (51 by 102 mm) lumber spaced 16 in. (406 mm) OC. Steel studs to be min 2-1/2 in. (64 mm) wide and spaced max 24 in. (610 mm) OC.
   B. Gypsum Board* — One layer of nom 5/8 in. (16 mm) thick gypsum board, as specified in the Individual Wall and Partition Design. Max diam of opening is 8-5/8 in. (219 mm).
2. Metallic Sleeve — Nom 8 in. (203 mm) diam (or smaller) Schedule 40 (or heavier) steel sleeve cast into wall assembly with joint compound and installed flush with wall surfaces.
3. Air Duct — Nom 6 in. (152 mm) diam (or smaller) prefabricated No. 28 MSG galv sheet metal duct. A min 1/2 in. (13 mm) to max 1-1/2 in. (38 mm) annular space is required within the firestop system. Duct to be rigidly supported on both sides of wall assembly.
4. Forming Material* — Foamed plastic forming material foamed into opening as a permanent form. Forming material to be recessed from both surfaces of wall as required to accommodate the required thickness of fill material.
   HILTI CONSTRUCTION CHEMICALS, DIV OF HILTI INC — CFS12 or CF-AS C-P Foam Sealant
5. Fill, Void or Cavity Material* — Min 5/8 in. (16 mm) thickness of fill material applied within annulus, flush with both surfaces of wall.
   HILTI CONSTRUCTION CHEMICALS, DIV OF HILTI INC — FS-ONE Sealant or FS-ONE MAX Intumescent Sealant

* Indicates such products shall bear the UL or cUL Certification Mark for jurisdictions employing the UL or cUL Certification (such as Canada), respectively.

HILTI
Hilti Firestop Systems

Reproduced by HILTI, Inc. Courtesy of Underwriters Laboratories, Inc. January 26, 2015

LAFATE WILSON
architects

1030 arlington ave n, st petersburg fl 33705
(727) 490-9483
studio@lafatewilson.com

THE ARCHITECT'S COMMON LAW COPYRIGHT AND OTHER PROPERTY RIGHTS ARE HEREBY RESERVED IN THE IDEAS, DESIGNS, PLANS, DRAWINGS, AND SPECIFICATIONS SHALL NOT BE REPRODUCED OR CONVEYED IN ANY MANNER NOR ASSIGNED TO ANY THIRD PARTY WITHOUT FIRST OBTAINING THE EXPRESS WRITTEN PERMISSION OF THE ARCHITECT.

OLD MEMORIAL

13600 National Golf Dr
Tampa, FL 33626

no.	description	date
	PERMIT SET	04.24.26

M6.04

DETAILS - MECHANICAL

sheet size 24" x 36"

Reviewed for Code Compliance
With The Florida Building Code
ECS, Florida LLC
41-5640-BLD2 7/20/2026

Electrical Review - Roger Sanders PX651 - Reviewed - 7/14/2026
Mechanical Review - Roger Sanders PX651 - Reviewed - 7/14/2026
Plumbing Review - Roger Sanders PX651 - Reviewed - 7/14/2026
Fire Review - Jay Traina - NA to Private Provider - 7/16/2026
Building Review - Roger Sanders PX651 - Reviewed - 7/14/2026

LAFATE WILSON
architects

1030 arlington ave n, st petersburg fl 33705
(727) 490-9483
studio@lafatewilson.com

THE ARCHITECT'S COMMON LAW COPYRIGHT AND OTHER PROPERTY RIGHTS ARE HEREBY RESERVED IN THE IDEAS, DESIGNS, PLANS, DRAWINGS, AND SPECIFICATIONS SHALL NOT BE REPRODUCED OR CONVEYED IN ANY MANNER NOR ASSIGNED TO ANY THIRD PARTY WITHOUT FIRST OBTAINING THE EXPRESS WRITTEN PERMISSION OF THE ARCHITECT.

System No. W-L-7042

WL 7042

Classified by Underwriters Laboratories, Inc. to UL 1479 and CAN/ULC-S115

ANSI/UL1479 (ASTM E814)	CAN/ULC S115
F Ratings - 1 and 2 Hr (See Items 1 and 3)	F Ratings - 1 and 2 Hr (See Items 1 and 3)
T Rating - 0 Hr	FT Rating - 0 Hr
	FH Ratings - 1 and 2 Hr (See Items 1 and 3)
	FTH Rating - 0 Hr

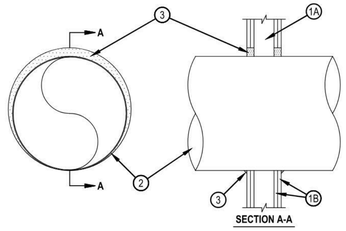

SECTION A-A

Reproduced by HILTI, Inc. Courtesy of Underwriters Laboratories, Inc. October 12, 2017

Hilti Firestop Systems

Page: 1 of 2

System No. W-L-7042

WL 7042

1. Wall Assembly — The 1 or 2 hr fire rated wallboard/stud wall assembly shall be constructed of the materials and in the manner specified in the individual U300, U400, V400 or W400 Series Wall and Partition Designs in the UL Fire Resistance Directory and shall include the following construction features.
   A. Studs — Wall framing may consist of either wood studs or steel channel studs. Wood studs to consist of nom 2 by 4 in. (51 by 102 mm) lumber spaced 16 in. (406 mm) OC. Steel studs to be min 2-1/2 in. (64 mm) wide and spaced 24 in. (610 mm) OC. Additional framing members shall be used to completely frame the opening for all ducts greater than 20 in. (502 mm) diam.
   B. Gypsum Board* — For 1 hr assembly, one layer of min 5/8 in. (16 mm) thick wallboard as required in the individual Wall and Partition Design. For 2 hr assembly, two layers of min 5/8 in. (16 mm) thick wallboard as required in the individual Wall and Partition Design. Max diam of opening is 14-1/2 in. (368 mm) for wood stud walls and 25-1/2 in. (648 mm) for steel stud walls.
   The hourly F and FH Ratings of the firestop system are equal to the hourly fire rating of the wall assembly in which it is installed.
2. Through Penetrant — Galv steel duct to be installed concentrically or eccentrically within the firestop system. The annular space between the duct and periphery of opening shall be 0 in. (0 mm, point contact) and max 1-1/2 in. (64 mm) Duct to be rigidly supported on both sides of wall assembly.
   A. Spiral Wound HVAC Duct — Nom 24 in. (610 mm) diam (or smaller) No. 28 MSG (or heavier) galv steel spiral wound duct.
   B. Sheet Metal Duct — Nom 12 in. (305 mm) diam (or smaller) No. 28 MSG (or heavier) galv sheet steel duct.
3. Fill, Void or Cavity Material*—Sealant — Min 5/8 in. (16 mm) and 1-1/4 in. (32 mm) thickness of fill material applied within annulus, flush with both surfaces of wall assembly for 1 and 2 hr F Ratings, respectively. When FS-ONE Max is used, min 5/8 in. (16mm) thickness for both 1 and 2 hr F Ratings. At the point contact location between duct and wallboard, a min 1/2 in. (13 mm) diam bead of sealant shall be applied at the wallboard/duct interface on both surfaces of wall assembly.
   HILTI CONSTRUCTION CHEMICALS, DIV OF HILTI INC — CP601S Elastomeric Firestop Sealant, FS-ONE Sealant, FS-ONE MAX Intumescent Sealant or CP606 Flexible Firestop Sealant

* Indicates such products shall bear the UL or cUL Certification Mark for jurisdictions employing the UL or cUL Certification (such as Canada), respectively.

Reproduced by HILTI, Inc. Courtesy of Underwriters Laboratories, Inc. October 12, 2017

Hilti Firestop Systems

Page: 2 of 2

System No. W-L-7153

WL 7153

Classified by Underwriters Laboratories, Inc. to UL 1479 and CAN/ULC-S115

ANSI/UL1479 (ASTM E814)	CAN/ULC S115
F Ratings - 1 and 2 Hr (See Item 1)	F Ratings - 1 and 2 Hr (See Item 1)
T Rating - 1/2 Hr	FT Rating - 1/2 Hr
	FH Ratings - 1 and 2 Hr (See Item 1)
	FTH Rating - 1/2 Hr

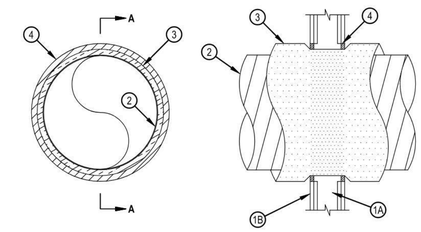

SECTION A-A

1. Wall Assembly — The 1 or 2 hr fire-rated gypsum wallboard/stud wall assembly shall be constructed of the materials and in the manner described in the individual U400, V400 or W400 Series Wall or Partition Design in the UL Fire Resistance Directory and shall include the following construction features:
   A. Studs — Wall framing shall consist of channel studs. Steel studs to be min 3-1/2 in. (89 mm) wide and spaced max 24 in. (610 mm) OC.
   B. Wallboard, Gypsum* — 5/8 in. (16 mm) thick, 4 ft (122 cm) wide with square or tapered edges. The gypsum board type, thickness, number of layers, fastener type and sheet orientation shall be as specified in the individual Wall and Partition Design in the UL Fire Resistance Directory. Max diam of opening is 24 in. (610 mm).
   The hourly F and FH Ratings of the firestop system are equal to the hourly fire rating of the wall assembly in which it is installed.

Reproduced by HILTI, Inc. Courtesy of Underwriters Laboratories, Inc. November 15, 2017

Hilti Firestop Systems

Page: 1 of 2

System No. W-L-7153

WL 7153

2. Steel Duct — Galv steel duct to be installed concentrically or eccentrically within the firestop system. Duct to be rigidly supported on both sides of wall assembly.
   A. Spiral Wound HVAC Duct — Nom 20 in. (508 mm) diam (or smaller) No. 24 MSG (or heavier) galv steel spriral wound duct.
   B. Sheet Metal Duct — Nom 12 in. (305 mm) diam (or smaller) No. 28 MSG (or heavier) galv sheet steel duct.
3. Duct Insulation* — Nom 1-1/2 in. or 2 in. (38 or 51 mm) thick glass fiber batt or blanket (min 3/4 pcf or 56 kg/m3) jacketed on the outside with a foil-scrim-kraft facing. Longitudinal and transverse joints sealed with aluminum foil tape. During the installation of the fill material, the batt or blanket shall be compressed 50% such that the annular space within the firestop system shall be min 1/4 in. (6 mm) to max 1-1/2 in. (38 mm). See Batts and Blankets - (BKNV) category in the Building Materials Directory for names of manufacturers. Any batt or blanket meeting the above specifications and bearing the UL Classification Marking with a Flame Spread Index of 25 or less and a Smoke Developed Index 50 or less may be used.
4. Fill, Void or Cavity Material* — Sealant — Min 5/8 in. (16 mm) thickness of fill material applied within annulus, flush with both surfaces of wall. If voids develop after the fill materials cures, the voids shall be sealed with additional fill material.
   HILTI CONSTRUCTION CHEMICALS, DIV OF HILTI INC — FS-ONE Sealant or FS-ONE MAX Intumescent Sealant

* Indicates such products shall bear the UL or cUL Certification Mark for jurisdictions employing the UL or cUL Certification (such as Canada), respectively.

Reproduced by HILTI, Inc. Courtesy of Underwriters Laboratories, Inc. November 15, 2017

Hilti Firestop Systems

Page: 2 of 2

System No. W-L-7040

WL 7040

Classified by Underwriters Laboratories, Inc. to UL 1479 and CAN/ULC-S115

ANSI/UL1479 (ASTM E814)	CAN/ULC S115
F Ratings - 1 and 2 Hr (See Items 1 and 3)	F Ratings - 1 and 2 Hr (See Items 1 and 3)
T Rating - 0 Hr	FT Rating - 0 Hr
L Rating at Ambient - Less Than 1 CFM/sq ft	FH Ratings - 1 and 2 Hr (See Items 1 and 3)
L Rating at 400°F - Less Than 1 CFM/sq ft	FTH Rating - 0 Hr
	L Rating at Ambient - Less Than 1 CFM/sq ft
	L Rating at 400°F - Less Than 1 CFM/sq ft

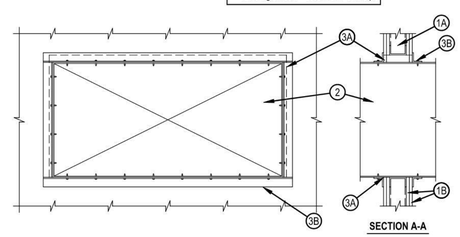

SECTION A-A

1. Wall Assembly — The fire-rated gypsum wallboard/stud wall assembly shall be constructed of the materials and in the manner specified in the individual U300, U400, V400 or V400 Series Wall and Partition Designs in the Fire Resistance Directory and shall include the following construction features:
   A. Studs — Wall framing may consist of either wood studs or steel channel studs. Wood studs to consist of nom 2 by 4 in. (61 by 102 mm) lumber spaced 16 in. (406 mm) OC. Steel studs to be min 2-1/2 in. (64 mm) wide and spaced max 24 in. (610 mm). Additional framing members shall be used to completely frame around opening.
   B. Gypsum Board* — Nom 5/8 in. (16 mm) thick with square or tapered edges. The gypsum wallboard type, number of layers and sheet orientation shall be as specified in the individual Wall and Partition Design Number. Max area of opening is 1300 in.^{2} (0.84 m^2) with the dimension of 50 in. (1.27 m).
   The hourly F and FH Ratings of the firestop system are equal to the hourly fire rating of the wall assembly in which it is installed.

2. Steel Duct — Nom 24 in. by 48 in. (610 by 1219 mm) (or smaller) No. 24 gauge (or heavier) galv steel duct to be installed within the firestop system. The annular space shall be min 0 (point contact) in. to a max 2 in. (51 mm) Duct to be rigidly supported on both sides of the wall assembly.

Reproduced by HILTI, Inc. Courtesy of Underwriters Laboratories, Inc. September 16, 2015

Hilti Firestop Systems

Page: 1 of 2

System No. W-L-7040

WL 7040

3. Firestop System — The firestop system shall consist of the following:
   A. Fill, Void or Cavity Material*—Sealant — Min 5/8 in. (16 mm) thickness of fill material applied within annulus flush with both surfaces of wall. At point contact location, a min 1/2 in. (13 mm) diam bead of fill material shall be applied to the wall/duct interface on both surfaces of wall.
   HILTI CONSTRUCTION CHEMICALS, DIV OF HILTI INC — FS-ONE Sealant, FS-ONE MAX Intumescent Sealant, CP601S Elastomeric Firestop Sealant or CP606 Flexible Sealant
   B. Steel Retaining Angle — No. 18 MSG (0.048 in.) galv steel angles cut to fit contour of duct with a 2 in. overlap on the duct and a min 1 in. overlap on the gypsum board assembly on both sufaces of wall. 2 in. leg of angle secured to duct with min No. 8 by 3/4 in. long sheet metal screws, spaced a max of 6 in. OC. When bead of fill material is used at joint contact locations, angles shall be installed prior to full material curing.

* Indicates such products shall bear the UL or cUL Certification Mark for jurisdictions employing the UL or cUL Certification (such as Canada), respectively.

Reproduced by HILTI, Inc. Courtesy of Underwriters Laboratories, Inc. September 16, 2015

Hilti Firestop Systems

Page: 2 of 2

OLD MEMORIAL

13600 National Golf Dr
Tampa, FL 33626

no.	description	date
	PERMIT SET	04.24.26

M6.05

DETAILS - MECHANICAL

sheet size 24" x 36"

Reviewed for Code Compliance
With The Florida Building Code
ECS, Florida LLC
41-5640-BLD2 7/20/2026

Electrical Review - Roger Sanders PX651 - Reviewed - 7/14/2026
Mechanical Review - Roger Sanders PX651 - Reviewed - 7/14/2026
Plumbing Review - Roger Sanders PX651 - Reviewed - 7/14/2026
Fire Review - Jay Traina - NA to Private Provider - 7/16/2026
Building Review - Roger Sanders PX651 - Reviewed - 7/14/2026

LAFATE WILSON
architects

1030 arlington ave n, st petersburg fl 33705
(727) 490-9483
studio@lafatewilson.com

THE ARCHITECT'S COMMON LAW COPYRIGHT AND OTHER PROPERTY RIGHTS ARE HEREBY RESERVED IN THE IDEAS, DESIGNS, PLANS, DRAWINGS, AND SPECIFICATIONS SHALL NOT BE REPRODUCED OR CONVEYED IN ANY MANNER NOR ASSIGNED TO ANY THIRD PARTY WITHOUT FIRST OBTAINING THE EXPRESS WRITTEN PERMISSION OF THE ARCHITECT.

System No. W-L-7059

WL 7059

CLASSIFIED C UL US
Classified by Underwriters Laboratories, Inc. to UL 1479 and CAN/ULC-S115

ANSI/UL1479 (ASTM E814)	CAN/ULC S115
F Ratings - 1 and 2 Hr (See Item 1)	F Ratings - 1 and 2 Hr (See Item 1)
T Rating - 1/2 and 3/4 Hr (See Item 1)	FT Rating - 1/2 and 3/4 Hr(See Item 1)
	FH Ratings - 1 and 2 Hr (See Item 1)
	FTH Rating - 1/2 and 3/4 Hr (See Item 1)

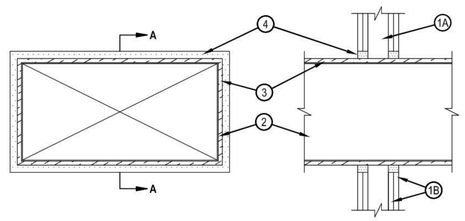

SECTION A-A

1. Wall Assembly — The 1 or 2 hr fire-rated gypsum wallboard/stud wall assembly shall be constructed of the materials and in the manner described in the individual U400, V400 or W400 Series Wall or Partition Design in the UL Fire Resistance Directory and shall include the following construction features:
   A. Studs — Wall framing shall consist of channel studs. Steel studs to be min 2-1/2 in. (64 mm) wide and spaced max 24 in. (610 mm) OC. The opening in the wall to accommodate the steel duct (Item 2) shall be framed on all sides using lengths of studs installed between the vertical studs and attached to the studs at each end. The framed opening in the wall shall be a nom 6 in. (152 mm) wide and 12 in. (305 mm) higher than the width and height of the steel duct.
   B. Wallboard, Gypsum* — 5/8 in. (16 mm) thick, 4 ft (1.22 mm) wide with square or tapered edges. The gypsum wallboard type, thickness, number of layers, fastener type and sheet orientation shall be as specified in the Individual U300, U400, V400 or W400 Series Design in the UL Fire Resistance Directory. Max area of opening is 395 sq. in. (0.25 m2)with max dimensions of 26-3/4 in. (679 mm) for steel studs. The hourly F and FH Ratings of the firestop system are equal to the hourly fire rating of the wall assembly in which it is installed. The hourly T, FT and FTH Ratings are 1/2 hr and 3/4 hr for 1 and 2 hr rated assemblies, respectively

HILTI
Hilti Firestop Systems

Reproduced by HILTI, Inc. Courtesy of Underwriters Laboratories, Inc.
January 27, 2015

Page: 1 of 2

System No. W-L-7059

WL 7059

2. Steel Duct — Nom 24 in. by 12 in. (610 by 305 mm) (or smaller) No. 24 gauge (or heavier) steel duct to be installed eccentrically within the framed opening. The annular space shall be min 1 in. (25 mm) to max 1-3/4 in. (45 mm) Steel duct to be rigidly supported on both sides of wall assembly.
3. Batts and Blankets* — Max 1-1/2 in. (38 mm) thick glass fiber batt or blanket (min 3/4 pcf or 12 kg/m3) jacketed on the outside with a foil-scrim-kraft facing. Longitudinal and transverse joints sealed with aluminum foil tape. During the installation of the fill material, the batt or blanket shall be compressed 50% such that the annular space within the firestop system shall be min 1/4 in. (6 mm) to max 1 in. (25 mm). See Batts and Blankets - (BKNV) category in the Building Materials Directory for names of manufacturers. Any batt or blanket meeting the above specifications and bearing the UL Classification Marking with a Flame Spread Index of 25 or less and a Smoke Developed Index 50 or less may be used.
4. Fill, Void or Cavity Material* - Sealant — Min 5/8 in. or 1-1/4 in. (16 or 32 mm) thickness of fill material applied within annulus, flush with both surfaces of wall for 1 or 2 hr walls, respectively. If voids develop after the fill materials cures, the voids shall be sealed with additional fill material.
   HILTI CONSTRUCTION CHEMICALS, DIV OF HILTI INC — FS-ONE Sealant or FS-ONE MAX Intumescent Sealant

* Indicates such products shall bear the UL or cUL Certification Mark for jurisdictions employing the UL or cUL Certification (such as Canada), respectively.

HILTI
Hilti Firestop Systems

Reproduced by HILTI, Inc. Courtesy of Underwriters Laboratories, Inc.
January 27, 2015

Page: 2 of 2

System No. W-L-7151

WL 7151

CLASSIFIED C UL US
Classified by Underwriters Laboratories, Inc. to UL 1479 and CAN/ULC-S115

ANSI/UL1479 (ASTM E814)	CAN/ULC S115
F Ratings - 1 and 2 Hr (See Item 1)	F Ratings - 1 and 2 Hr (See Item 1)
T Rating - 0, 1, and 2 Hr (See Item 4C)	FT Rating - 0, 1, and 2 Hr (See Item 4C)
	FH Ratings - 1 and 2 Hr (See Item 1)
	FTH Ratings - 0, 1, and 2 Hr (See Item 4C)

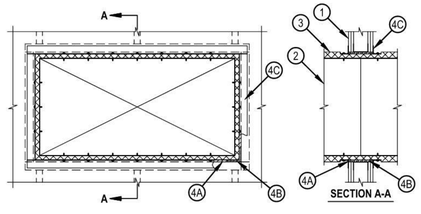

SECTION A-A

1. Wall Assembly — The fire-rated gypsum board/stud wall assembly shall be constructed of the materials and in the manner specified in the individual U300, U400, V400 or W400 Series Wall and Partition Designs in the Fire Resistance Directory and shall include the following construction features:
   A. Studs — Wall framing may consist of either wood studs or steel channel studs. Wood studs to consist of nom 2 by 4 in. (51 by 102 mm) lumber spaced 16 in. (406 mm) OC. Steel studs to be min 3-1/2 in. (89 mm) wide and spaced max 24 in. (610 mm). Additional framing members shall be used to completely frame around opening.
   B. Gypsum Board* — Nom 5/8 in. (16 mm) thick with square or tapered edges. The gypsum wallboard type, number of layers and sheet orientation shall be as specified in the individual Wall and Partition Design Number. Max area of opening is 210 sq in. (1355 cm2) with a max width of 14-1/2 in. (368 mm) for wood studs. Max area of opening is 2457 in2 (1.58 m2) with the max length or width dimension of 63 in. (1600 mm) for steel studs. The hourly F and FH Ratings of the firestop system are equal to the hourly fire rating of the wall assembly in which it is installed.
2. Steel Duct — Nom 36 in. by 60 in. (914 mm by 1524 mm or smaller) galv steel duct to be installed within the firestop system. The duct shall be constructed and reinforced in accordance with SMACNA construction standards. Duct to be rigidly supported on both sides of the wall assembly.
3. Batts and Blankets* — Max 2 in. (51 mm) thick min 3/4 pcf (12 kg/m3) glass fiber batt or blanket jacketed on the outside with a foil-scrim-kraft facing. Longitudinal and transverse joints sealed with aluminum foil tape. During the installation of the fill material, the batt or blanket shall be compressed minimum 50% such that the annular space within the firestop system shall be min 1/4 in. (6 mm) to a max 3-1/2 in. (89mm); refer to the table below.
   See Batts and Blankets - (BKNV) category in the Building Materials Directory for names of manufacturers. Any batt or blanket meeting the above specifications and bearing the UL Classification Marking with a Flame Spread Index of 25 or less and a Smoke Developed Index 50 or less may be used.

HILTI
Hilti Firestop Systems

Reproduced by HILTI, Inc. Courtesy of Underwriters Laboratories, Inc.
August 22, 2018

Page: 1 of 2

System No. W-L-7151

WL 7151

4. Firestop System — The firestop system shall consist of the following:
   A. Packing Material — Min 3-1/2 in. (89 mm) thickness of min 4.0 pcf (64 kg/m3) mineral wool batt insulation firmly packed into the opening as a permanent form. Packing material to be recessed from both sides of the wall to accommodate the required thickness of fill material.
   B. Fill, Void or Cavity Material*—Sealant — Min 5/8 in. (16 mm) thickness of fill material applied within annulus flush with both surfaces of the wall.
   HILTI CONSTRUCTION CHEMICALS, DIV OF HILTI INC — FS-ONE MAX Intumescent Sealant
   C. Steel Retaining Angle — No. 18 MSG (or heavier) galv steel angles. When duct dimension exceeds 48 in. (1219 mm), angles shall be No. 16 MSG (or heavier). Angles cut to fit contour of duct with a 2 in. (51 mm) overlap on the duct and a min 1 in. (25 mm) overlap on the gypsum board assembly on both surfaces of wall. 2 in. (51 mm) leg of angle secured to duct with min No. 8 by 3/4 in. (19 mm) long sheet metal screws, spaced a max of 6 in. (152 mm) OC. Angles are optional for ducts 30 in. (762 mm) by 24 in. (610 mm) and smaller. In addition, see table below for additional conditions and options regarding retaining angles.

Max Duct Dimension	Duct Thickness	Max Insulation Thickness (Item 3)	Annular Space	Packing Material (Item 4A) Required	Angle (Item 4C) Required	T-Rating Hr
**24 in. (610 mm)	24 ga or heavier	1-1/2 in. (38 mm)	1/4 in. min to 1 in. max (6 to 25 mm)	No	No	0
25 in. (635 mm) wide by 45 in. (1143 mm) high	24 ga or heavier	2 in. (51 mm)	1/4 in. min to 3-1/2 in. max (6 to 89 mm)	Yes	No	1 and 2 (Same as wall rating)

** Indicates that when max 1-1/2 in. (38 mm) thick insulation is used, steel angles are optional for those sides of the duct that do not exceed the dimension specified.

* Indicates such products shall bear the UL or cUL Certification Mark for jurisdictions employing the UL or cUL Certification (such as Canada), respectively.

HILTI
Hilti Firestop Systems

Reproduced by HILTI, Inc. Courtesy of Underwriters Laboratories, Inc.
August 22, 2018

Page: 2 of 2

OLD MEMORIAL

13600 National Golf Dr
Tampa, FL 33626

no.	description	date
	PERMIT SET	04.24.26

M6.06

DETAILS - MECHANICAL

sheet size 24" x 36"

Reviewed for Code Compliance
With The Florida Building Code
ECS, Florida LLC
41-5640-BLD2 7/20/2026

Electrical Review - Roger Sanders PX651 - Reviewed - 7/14/2026
Mechanical Review - Roger Sanders PX651 - Reviewed - 7/14/2026
Plumbing Review - Roger Sanders PX651 - Reviewed - 7/14/2026
Fire Review - Jay Traina - NA to Private Provider - 7/16/2026
Building Review - Roger Sanders PX651 - Reviewed - 7/14/2026

PLUMBING SPECIFICATIONS

GENERAL CONDITIONS
THE GENERAL CONDITIONS, SPECIAL CONDITIONS, SUPPLEMENTARY CONDITIONS AND MECHANICAL CONDITIONS OF THE SPECIFICATIONS AND "GENERAL CONDITIONS OF THE CONTRACT", CURRENT EDITION, ESTABLISHED IN STANDARD FORM BY THE AMERICAN INSTITUTE OF ARCHITECTS SHALL APPLY TO ALL WORK ON THIS PROJECT EXCEPT AS MODIFIED BELOW. THIS CONTRACTOR SHALL FAMILIARIZE HIMSELF WITH THESE PROVISIONS AND ADHERE TO THESE REQUIREMENTS. CONTRACTOR SHALL COORDINATE HIS WORK WITH OTHER TRADES PRIOR TO INSTALLATION.

RELATED DOCUMENTS
THIS CONTRACTOR IS REFERRED TO THE ARCHITECTURAL, MECHANICAL AND ELECTRICAL PLANS AND SPECIFICATIONS, SUCH PLANS AND SPECIFICATIONS ARE A PART OF THE CONTRACT DOCUMENTS. CONTRACTORS SHALL VISIT THE SITE AND FAMILIARIZE THEMSELVES WITH ALL CONDITIONS SURROUNDING THE WORK. IF ANY OF THE CONDITIONS REQUIRE A MODIFICATION OF THE SYSTEMS INDICATED BY THESE PLANS AND SPECIFICATIONS, THE CONTRACTOR SHALL INCLUDE THE COST OF SUCH MODIFICATIONS IN HIS BID. NO EXTRA COMPENSATION WILL BE ALLOWED BECAUSE OF FAILURE TO FIELD VERIFY EXISTING CONDITIONS PRIOR TO SUBMITTING BIDS.

MODIFICATIONS TO PLANS AND SPECIFICATIONS
THROUGHOUT THE COURSES OF THE WORK, MINOR CHANGES AND ADJUSTMENTS TO PLANS AND SPECIFICATIONS MAY BE REQUESTED BY THE ARCHITECT/ENGINEER. THE CONTRACTOR SHALL MAKE SUCH ADJUSTMENTS WITHOUT ADDITIONAL COST TO THE OWNER. WHERE SUCH ADJUSTMENTS ARE NECESSARY FOR THE PROPER INSTALLATION AND OPERATION AND WITHIN THE INTENT OF THE CONTRACT DOCUMENTS.

EQUIPMENT SUBSTITUTION
IT IS THE INTENT OF THE PLANS AND SPECIFICATIONS TO FORM A GUIDE FOR A COMPLETE INSTALLATION. EVERYTHING NECESSARY FOR THE COMPLETION AND SUCCESSFUL OPERATION OF THE WORK, WHETHER OR NOT HEREIN DEFINITELY SPECIFIED OR INDICATED ON THE DRAWINGS SHALL BE FURNISHED AND INSTALLED AS WELL AND AS FAITHFULLY AS IT IS SPECIFIED OR INDICATED WITH OUT ADDITIONAL COST TO THE OWNER. THE MECHANICAL CONTRACTOR SHALL VERIFY ALL DIMENSIONS AND LENGTHS PRIOR TO INSTALLATION.

IF ANY ERRORS, DISCREPANCIES OR OMISSIONS APPEAR IN THE DRAWINGS, SPECIFICATIONS OR OTHER CONTRACT DOCUMENTS, THE CONTRACTOR SHALL NOTIFY THE ARCHITECT/ENGINEER IN WRITING OF SUCH ERROR OMISSION. IN THE EVENT OF THE CONTRACTOR FAILS TO GIVE SUCH NOTICE BEFORE CONSTRUCTION AND/OR FABRICATION OF THE WORK, HE WILL BE HELD RESPONSIBLE FOR THE RESULTS OF ANY SUCH ERRORS, DISCREPANCIES OR OMISSIONS AND THE COST TO RECTIFYING SAME.

PERMITS, FEES, LICENSES
THIS CONTRACTOR SHALL PAY ALL FEES AND RELATED CHARGES REQUIRED FOR PERMITS, LICENSES, ETC... REQUIRED FOR INSTALLATION OF THE PLUMBING SYSTEMS.

EQUIPMENT SUBSTITUTION
THIS CONTRACTOR SHALL REIMBURSE THE ELECTRICAL CONTRACTOR, WITHOUT ANY CHARGE TO OWNER, ANY COSTS THE ELECTRICAL CONTRACTOR INCURS DUE TO THIS CONTRACTOR'S SUBSTITUTION OF EQUIPMENT HAVING DIFFERENT ELECTRICAL SERVICE REQUIREMENTS THAN THE SPECIFIED EQUIPMENT.
CONTRACTOR SHALL NOTIFY A/E 10 DAYS PRIOR TO BID ANY SUBSTITUTION FOR REVIEW AND APPROVAL BY THE A/E. ANY FIXTURES AND EQUIPMENT NOT SUBMITTED FOR REVIEW/APPROVAL SHALL BE SUBJECT TO REJECTION.

SHOP DRAWINGS
THIS CONTRACTOR SHALL PROVIDE THE ARCHITECT WITH A MINIMUM OF SEVEN CERTIFIED COPIES OF ALL SHOP AND EQUIPMENT DRAWINGS FOR HIS APPROVAL, TWO OF WHICH SHALL BE RETAINED BY THE ARCHITECT/ENGINEER AND THE REMAINING BEING RETURNED TO THE CONTRACTOR. DRAWINGS SHALL BE SUBMITTED BEFORE START AT CONSTRUCTION. FAILURE OF COMPLIANCE WITH THIS PARAGRAPH WILL RESULT IN WITHHOLDING OF FINAL PAYMENT.

WARRANTY
THIS CONTRACTOR SHALL WARRANT HIS WORK TO BE FREE FROM DEFECTS IN MATERIALS AND WORKMANSHIP FOR A PERIOD OF ONE YEAR FROM SUBSTANTIAL COMPLETION.

BASIC MATERIALS AND METHODS
ALL WORKMANSHIP AND MATERIALS SHALL BE OF THE HIGHEST QUALITY IN EVERY RESPECT. ALL MATERIALS AND EQUIPMENT SHALL BE NEW, OF THE LATEST DESIGN AND FREE OF DEFECTS. ALL MATERIALS AND EQUIPMENT SHALL CONFORM TO THE LATEST AMENDED EDITION OF ALL APPLICABLE STANDARDS, INCLUDING BUT NOT LIMITED TO, ASTM, UL AND NEMA STANDARDS.

INSTALL ALL PIPING TO PRESENT A NEAT AND ORDERLY APPEARANCE. RUN ALL LINES PARALLEL WITH BUILDING WALLS AND CONSTRUCTION. KEEP PIPING FREE FROM CONTACT WITH STRUCTURE OR EQUIPMENT TO PREVENT NOISE TRANSMISSION, ALLOWING CLEARANCES FOR EXPANSION AND CONTRACTION. PROVIDE ACCESS DOORS OR PANELS FOR ALL VALVES, CLEANOUTS, CONTROL DEVICES, ETC...

WATER SUPPLY PIPING
ALL ABOVE GROUND WATER SUPPLY PIPE SHALL BE EITHER COPPER OR CPVC (AS APPROVED BY OWNER). PIPING SHALL MEET THE FOLLOWING:

COPPER SHALL BE TYPE L HARD TEMPER COPPER WATER TUBE COMPLYING WITH ASTM B88. ALL FITTINGS SHALL BE WROUGHT COPPER COMPLYING WITH USASI B16.1B & B16.1BA. DIELECTRIC COUPLINGS SHALL BE USED BETWEEN STEEL AND COPPER CONNECTIONS. ALL BELOW GROUND WATER SUPPLY PIPE SHALL BE TYPE K COPPER WATER TUBE. PROVIDE 95-5 LEAD-FREE, SILVER SOLENOID JOINTS.

CPVC PIPING: ASTM F441/F441M-15 CHLORINATED POLY PLASTIC PIPE. SCHEDULE 40 AND 80 HOT AND COLD WATER DISTRIBUTION PIPING IS AN ACCEPTABLE ALTERNATE UPON WRITTEN APPROVAL OF THE OWNER.

SANITARY WASTE AND VENT PIPING - (IF PERMITTED BY LOCAL CODE)
ALL ABOVE GROUND STORM, SANITARY WASTE AND VENT PIPING SHALL BE SCHEDULE 40 PVC-DWV PIPE AND FITTINGS (ASTM D2665) WITH SOLVENT WELD JOINTS. ALL BELOW GROUND SANITARY SOIL AND WASTE PIPING SHALL BE SCHEDULE 40 PVC-DWV PIPE FITTINGS (AST D2665) WITH SOLVENT WELD JOINTS.

PIPE HANGERS AND SUPPORT
SUPPORT HORIZONTAL PIPING ADEQUATELY FROM SLABS OR OTHER STRUCTURAL MEMBERS AT INTERVALS SPECIFIED BELOW. SUPPORT ALL PIPING IN STRICT ACCORDANCE WITH SECTION 308 OF THE FBCP (7TH EDITION). USE GRINNELL #260 HANGERS, OR APPROVED EQUAL, HAVING ADJUSTABLE WROUGHT CLEVIS, SOLID RODS AND SOCKETS. PIPING INSTALLED ALONG WALLS SHALL BE SUPPORTED BY GRINNELL #199, OR APPROVED EQUAL, STEEL ANGLE BRACKETS. ALL PIPE HANGERS SHALL BE IN STRICT ACCORDANCE WITH SECTION 714 OF THE FBCB (7TH EDITION).

PIPES SLEEVES AND OPENINGS
THE CONTRACTOR SHALL CUT ALL OPENINGS IN FLOORS AND WALLS REQUIRED FOR PENETRATION OF PIPING. PATCH ALL OPENINGS FOR SOUND DEADENING AND FIRE SEPARATION. GENERAL CONTRACTOR SHALL PERFORM ALL FINISH PATCHING AS REQUIRED BY ARCHITECTURAL SPECIFICATIONS. ALL HORIZONTAL PIPING WHICH PENETRATES WALLS SHALL BE FITTED WITH PIPE SLEEVES MADE UP OF SIMILAR MATERIALS AS PIPE, 1" GREATER IN DIAMETER THAN OUTSIDE DIAMETER OF PIPE AND PIPE INSULATION. PIPE SLEEVES SHALL NOT BE USED FOR FIRE RATED PENETRATIONS UNLESS IT IS A LISTED COMPONENT OF AN APPROVED FIRE STOPPING SYSTEM. THE VOID BETWEEN PIPE AND SLEEVE SHALL BE SEALED WITH ROPE AND FILLED WITH NON-SHRINKING CEMENT. SLEEVES SHALL BE SUCH LENGTH THAT THEY END FLUSH WITH WALL FINISH ON BOTH SIDES OF WALL. PROVIDE RATED PENETRATIONS OF ALL WALLS AND FLOOR AS REQUIRED TO MAINTAIN THE RATING OF THE WALL OR FLOOR PENETRATED.

WHERE UNCOVERED EXPOSED PIPES PASS THRU WALLS, THEY SHALL BE FITTED WITH CRANE #10, OR EQUAL, WALL ESCUTCHEON PLATES. SLEEVES THROUGH WATER PROOF FLOORS SHALL EXTEND 2" ABOVE FINISHED FLOOR.

VALVES
THE CONTRACTOR SHALL FURNISH AND INSTALL VALVES WHERE INDICATED ON PLAN AND NECESSARY FOR PROPER SYSTEM OPERATION AND COMPONENT ISOLATION. PROVIDE VALVES RATED FOR 125 PSI OR GREATER WORKING PRESSURE IN WATER PIPING.

CHECK VALVE UP TO 3"	APOLLO 61-109 61-500 OR NIBCO T-413-13
GLOBE VALVE UP TO 3"	CRANE NO. 1240, 1241 OR EQUAL
BALL VALVE UP TO 3"	APOLLO SERIES 82-100 OR 82-200
FULLPORT	
TEMP. & PRESS RELIEF VALVE 3/4" F	WATTS 10L MOD. M4, OR EQUAL, 3/4" M x
WATER HAMMER ARRESTOR	WADE #10 (HOT), WADE #5 (COLD)
BACKFLOW PREVENTER	WATTS NO. 9D, OR EQUAL
VACUUM RELIEF VALVE	WATTS NO. 36A - 3/4" OR EQUAL
PRESSURE REDUCING VALVE	WATTS NO. U5
TRAP PRIMER VALVE	JR SMITH

INSULATION
INSULATION SHALL BE REQUIRED ON ALL HOT SURFACES TO RETARD UNDESIRABLE HEAT TRANSFER AND PREVENT CONDENSATION. INSULATION SHALL BE APPLIED TO PIPE LINES, AND EQUIPMENT ONLY AFTER THEY HAVE BEEN TESTED, INSPECTED AND ALL SURFACES THOROUGHLY CLEANED OF ALL MOISTURE, FOREIGN MATERIAL, GREASE AND RUST. INSULATION SHALL BE CONTINUOUS THROUGH WALLS, FLOORS, PARTITIONS, SLEEVES, ETC... EXCEPT WHERE OTHERWISE INDICATED OR SPECIFIED. ALL INSULATION ADHESIVES, SEALERS AND COATINGS SHALL HAVE A FIRE HAZARD RATING NOT TO EXCEED 25/50/50 FLAME SPREAD, FUEL CONTRIBUTED AND SMOKE DEVELOPED IN ACCORDANCE WITH UL 723 AND ASTM-E84. PROVIDE INSULATION FOR HOT WATER PIPING.

PIPE INSULATION SHALL BE 1" THICK RIGID FIBERGLASS WITH SELF-SEALING LAP AND ALL SERVICES JACKET OR APPROVED EQUAL. INSULATE ALL HOT WATER PIPING PER TABLE C403.2.10 OF THE FBCE.

INSULATION SHALL BE REQUIRED AT ALL ADA ACCESSIBLE LAVATORIES TO PROTECT AGAINST CONTACT OF HOT WATER AND DRAIN PIPES. INSULATE TRAP AND BOTH SUPPLIES WITH A HIGH IMPACT, STAIN RESISTANT, PREMOLDED VINYL COVERING. ALL WATER SUPPLY AND DRAIN PIPING UNDER ADA LAVATORIES SHALL BE INSULATED OR OTHERWISE CONFIGURED TO PROTECT AGAINST CONTACT IN ACCORDANCE WITH SECTION 605.5 OF THE FBCS (7TH EDITION). MANUFACTURES: TRUEBRO "HANDY-LAVGUARD", McGUIRE OR BROCAR "TRAP WRAP".

PLUMBING FIXTURES
ALL VENT & WATER PIPING SHALL RUN ABOVE FLOOR OF PLAN ON WHICH SHOWN UNLESS OTHERWISE INDICATED. ALL SANITARY DRAIN AND WASTE PIPING SHALL RUN BELOW FLOOR OF PLAN ON WHICH SHOWN UNLESS OTHERWISE INDICATED. WC-1, FD-1, ETC... REFER TO FIXTURES LISTED IN SCHEDULES AND LOCATED ON THE PLANS.

PLUMBING DEMOLITION NOTES

1. THE CONTRACTOR SHALL REVIEW NEW FLOOR PLANS FOR SYSTEMS TO REMAIN FEEDING OTHER AREA TO BE REUSED PRIOR TO DEMOLITION.
2. UNLESS NOTED OTHERWISE, REMOVE PLUMBING FIXTURES, VALVES, SUPPORTS AND ASSOCIATED PIPING BACK TO THE MAIN SOURCE. REFER TO FLOOR PLANS FOR EXISTING PIPING TO REMAIN OR SYSTEMS TO BE REUSED. REMOVE ALL UNUSED PIPING EXPOSED BY DEMOLITION AND DO NOT ABANDON IN PLACE UNLESS INTENDED TO BE REUSED.
3. MAINTAIN CONTINUITY OF EXISTING PIPING TO REMAIN AND OR BE REUSED.
4. IT SHALL BE THE RESPONSIBILITY OF THE CONTRACTOR TO REMOVE AND LEGALLY DISPOSE OF DEMOLISHED MATERIALS.
5. THE OWNER RESERVES THE RIGHT TO INSPECT THE MATERIAL SCHEDULED FOR REMOVAL AND SALVAGE ANY ITEMS DEEMED USEABLE AS SPARE PARTS.
6. EXISTING CONDITIONS INDICATED ON THIS DRAWING ARE TAKEN FROM EXISTING DOCUMENTS AND FIELD INVESTIGATION. IT IS RECOMMENDED FOR CONTRACTOR TO VISIT PROJECT AREA AND VERIFY EXISTING CONDITIONS PRIOR TO DEMOLITION.
7. THE DEMOLITION PLAN IS NOT INCLUSIVE OF ALL PIPING DEVICES AND FITTINGS ETC. IT IS INTENDED TO PROVIDE THE CONTRACTOR WITH GENERAL KNOWLEDGE OF EXISTING CONDITIONS WITHIN THE PROJECT AREA.
8. THE CONTRACTOR SHALL INSURE THAT PIPING REMAINING WITHIN THE PROJECT AREA IS SUPPORTED IN ACCORDANCE WITH THE SPECIFICATIONS. PIPING THAT ARE ATTACHED TO ITEMS BEING REMOVED DURING DEMOLITION SHALL BE SUPPORTED FROM THE STRUCTURE PRIOR TO REMOVING ITEM.
9. CONTRACTOR SHALL PATCH, PAINT, AND MATCH FINISHES WITH EXISTING SURFACES TO REMAIN WHERE PIPING HAS BEING REMOVED. THIS INCLUDES NEW PIPE TO BE LOCATED UNDER BOTTOM EXISTING FINISHED FLOORS, PIPE ABOVE HARD FINISHED CEILINGS OR INSIDE EXISTING WALLS.
10. CONTRACTOR SHALL REVIEW NEW FLOOR PLANS FOR DEVICES TO REMAIN PRIOR TO DEMOLITION
11. THE BUILDING WILL BE IN OPERATION DURING DEMOLITION AND CONSTRUCTION. CONTRACTOR SHALL REFER TO ARCHITECTURAL DRAWINGS ON PHASING INSTRUCTIONS. CONTRACTOR SHALL COORDINATE WITH OWNER ON DEMOLITION AND CONSTRUCTION SCHEDULE AND NOTIFY OWNER A MINIMUM OF 72 HOURS PRIOR TO POWER SHUTDOWN OR COMMENCING WORK IN EACH AREA.
12. REFER TO ARCHITECTURAL DEMOLITION DRAWINGS FOR FURTHER DEMOLITION INFORMATION. CONTRACTOR SHALL REMOVE ASSOCIATED ELECTRICAL DEVICES, EQUIPMENT AND OTHER EXISTING SYSTEMS SERVING ITEMS BEING REMOVED.
13. BEFORE DEMOLITION OF ANY PIPE SYSTEMS VERIFY ALL SOURCES BEING SERVED OUTSIDE CONSTRUCTION AREA. VERIFY WITH OWNER OR DEPARTMENT SUPERVISOR BEFORE DISRUPTING ANY SERVICES AFFECTED OUTSIDE THE CONSTRUCTION AREA. ANY EXISTING WATER SYSTEMS DISRUPTED BY DEMOLITION ARE TO BE RESTORED TO OPERATION IMMEDIATELY OR WITHIN TIME AGREED UPON WITH OWNER.
14. THE CONTRACTOR SHALL COORDINATE THE DISRUPTION IN THE SPACES LOCATED ON THE FLOOR BELOW THE AREA OF WORK WHEN INSTALLING THE NEW WORK AND PIPE.
15. PROVIDE JET CLEANING SERVICE FOR CLEANING EXISTING SANITARY LINES WITHIN THE PROJECT AREA TO A POINT OUTSIDE THE BUILDING TO REDUCE THE CHANCES OF BACKUPS.

GENERAL NOTES

1. REFERENCE THE SPECIFICATIONS FOR MATERIAL AND EQUIPMENT INSTALLATION STANDARDS.
2. PLANS ARE NOT COMPLETELY TO SCALE. PIPE ROUTING SHOWN IS SCHEMATIC AND IS NOT INTENDED TO INDICATE EXACT ROUTING. CONTRACTOR SHALL PROVIDE ANY ADDITIONAL OFFSETS AND FITTINGS REQUIRED FOR PROPER INSTALLATION AND TO MAINTAIN CLEARANCES. VERIFY STRUCTURAL, MECHANICAL AND ELECTRICAL INSTALLATIONS AND OTHER POTENTIAL OBSTRUCTIONS AND ROUTE PIPING TO AVOID INTERFERENCES.
3. PROVIDE ALL OFFSETS AND FITTINGS AND MAKE CONNECTION TO SITE UTILITIES.
4. CONCEAL PIPING ABOVE CEILINGS, WITHIN WALLS OR CHASES EXCEPT IN MECHANICAL ROOMS OR AS SPECIFICALLY NOTED.
5. PROVIDE ACCESS DOOR / PANEL FOR ALL VALVES CONCEALED IN WALLS OR ABOVE NON-ACCESSIBLE CEILINGS.
6. SLEEVE ALL PENETRATIONS THROUGH WALLS, CEILING, AND FLOORS. SLEEVE AND/OR FIRE STOP ALL PENETRATIONS THROUGH RATED WALLS, CEILINGS, AND FLOORS WITH U/L LISTED ASSEMBLIES. PIPE SLEEVES SHALL NOT BE USED FOR FIRE RATED PENETRATIONS UNLESS IT IS A LISTED COMPONENT OF AN APPROVED FIRE STOPPING SYSTEM. M FIRE STOP ASSEMBLIES SHALL BE EQUAL OR EXCEED THE RATING OF THE WALL, CEILING, OR FLOOR. SEE ARCHITECTURAL DRAWINGS FOR FINAL FINISHES. ALL FIRE RATED PENETRATIONS SHALL BE IN ACCORDANCE WITH SECTION 714 OF THE FBCB (7TH EDITION).
7. SEE ARCHITECTURAL DRAWINGS FOR FIXTURE LOCATIONS AND MOUNTING HEIGHTS.
8. PROVIDE ASSE 1018 AUTOMATIC TRAP PRIMERS FOR ALL FLOOR DRAINS.
9. PROVIDE AN AIR GAP, WHEN REQUIRED BY CODE, SERVING INDIVIDUAL FIXTURES, DEVICES, APPLIANCES AND APPARATUS.
10. ALL EXPOSED PIPE AND FITTINGS IN FINISHED AREAS SHALL BE CHROME PLATED.
11. PROVIDE CLEANOUTS IN ACCORDANCE WITH ALL STATE AND LOCAL CODES. INSTALL CLEANOUT WITH COVER FLUSH TO FINISH SURFACE.
12. COORDINATE EXACT FLOOR DRAIN LOCATIONS WITH ARCHITECTURAL DRAWINGS. SET FLOOR DRAINS BELOW FINISHED FLOOR TO ALLOW FOR FLOOR SLOPING TO THE DRAIN.
13. COORDINATE PIPING WITH ALL ELECTRICAL EQUIPMENT (PANELS, TRANSFORMERS, ETC.) PRIOR TO ANY INSTALLATION. DO NOT ROUTE ANY PIPING OVER ANY ELECTRICAL PANELS UNDER ANY CIRCUMSTANCES. ANY PIPING RUN OVER PANELS SHALL BE RE-ROUTED AT NO ADDITIONAL COST.
14. ALL WALL MOUNTED LAVATORIES, WATER COOLERS AND OTHER WALL MOUNTED FIXTURES SHALL BE ATTACHED TO FLOOR MOUNTED CARRIER DESIGNED TO WITHSTAND A VERTICAL LOAD OF 250 POUNDS ON THE FRONT OF THE FIXTURE.
15. PROVIDE SANITARY WASTE, VENT, DOMESTIC WATER, ETC. ROUGH-IN AND MAKE FINAL CONNECTIONS (TO INCLUDE PROVIDING ALL NECESSARY RELATED STOPS, VALVES, TRAPS, ETC. AND MAKE READY FOR USE) TO ALL EQUIPMENT, WHETHER FURNISHED BY THIS CONTRACTOR OR FURNISHED BY OTHERS.
16. INSTALL ISOLATION/SHUT-OFF VALVES AT ALL MAIN RISERS AND MAIN BRANCH TAKEOFFS, TO PERMIT ISOLATION OF PIPING SECTIONS OR ENTIRE SYSTEM.
17. PROVIDE RIGID SUPPORT SWAY BRACING AT ALL CHANGES IN DIRECTION GREATER THAN 45° ON PIPING 4" AND LARGER.
18. PROVIDE WATER HAMMER ARRESTOR ON ALL COLD AND HOT WATER LINES SERVING PLUMBING FIXTURES. ARRESTORS SHALL BE SIZED IN ACCORDANCE WITH P.D.I. STANDARDS FOR THE TOTAL NUMBER OF FIXTURES SERVED.
19. ALL PIPING SHALL BE PROTECTED FROM THE INTRUSION OF WATER, DUST, DIRT, DEBRIS, ETC. WHILE STORED ON SITE AND DURING CONSTRUCTION.
20. ALL PRODUCTS USED INDOORS SHALL HAVE LOW VOC CONTENT THAT QUALIFIES FOR THE LATEST VERSION OF LEED.
21. ALL SERVICE LINES FOR WATER AND GAS SIZED TO PROVIDE FULL FLOW VOLUME FOR ALL ITEMS SUPPLIED ON RESPECTIVE MAINS AND BRANCHES. IDENTIFY ALL LINES WITH PERMANENT LABELS FOR THE SERVICE THEY PROVIDE.
22. ALL HOT AND COLD WATER SERVICE LINES, EXCEPT SHORT BRANCHES EXTENDED AND CONNECTED TO FIXTURES, SHALL BE INSULATED. ALL EXPOSED INSULATED LINES SHALL BE COVERED WITH PROTECTIVE COVERING TO SUIT THE APPLICATION.
23. ALL HORIZONTAL PIPING LINES EXTENDED AND CONNECTED TO EQUIPMENT, BELOW EQUIPMENT, SHALL BE RUN AT THE HIGHEST POSSIBLE ELEVATION ABOVE FLOOR, TO PROVIDE CLEARANCE FOR CLEARING. NO LINES SHALL LAY ON FLOOR.
24. ALL PIPING ROUTED THROUGH OR NEAR EQUIPMENT OR COUNTERS SHALL NOT INTERFERE WITH THE INTENDED USE OF, OR SERVICING OF, EQUIPMENT OR COUNTERS.
25. ALL EXPOSED PIPING AND FITTINGS SHALL BE CHROME PLATED OR STAINLESS STEEL. TAIL PIECES FOR SINKS SHALL BE 17 GAUGE CHROME PLATED FLARED BRASS TUBING FOR CONNECTION TO 1-1/2" I.P.S. MALE THREAD FITTING. "P" TRAPS SHALL BE CHROME PLATED BRASS, UNIFORM CODE PATTERN.
26. STOPS SHALL BE FURNISHED AND INSTALLED ON ALL HOT AND COLD WATER LINES AT EQUIPMENT. PROVIDE ALL REQUIRED SHUT-OFF VALVES, CHROME FINISH.

PLUMBING ABBREVIATIONS

AAV	AIR ADMITTANCE VALVE
AFF	ABOVE FINISH FLOOR
AW	ACID WASTE
AV	ACID VENT
CA	COMPRESSED AIR
CD	CONDENSATE DRAIN
CFH	CUBIC FEET PER HOUR
CO	CLEAN OUT
CONT	CONTINUATION
CW	COLD WATER
DCW	DOMESTIC COLD WATER
DN	DOWN
DS	DOWNSPOUT
DWG	DRAWING
EXIST	EXISTING
ESH	EMERGENCY SHOWER / EYEWASH
EWH	ELECTRIC WATER HEATER
EWC	ELECTRIC WATER COOLER
°F	DEGREE FAHRENHEIT
FCO	FLOOR CLEAN OUT
FD	FLOOR DRAIN
FS	FLOOR SINK
G	GAS
GPH	GALLONS PER HOUR
GPM	GALLONS PER MINUTE
GR	KITCHEN WASTE (GREASE)
HB	HOSE BIBB
HD	HUB DRAIN
HW	DOMESTIC HOT WATER
HWR	DOMESTIC HOT WATER RECIRCULATING
IE	INVERT ELEVATION
IW	INDIRECT WASTE
KW	KILOWATT
LBS	POUNDS
MH	MANHOLE
NC	NORMALLY CLOSED
NIC	NOT IN CONTRACT
NO	NORMALLY OPEN
NTS	NOT TO SCALE
OD	OUTSIDE DIAMETER
PEMB	PRE-ENGINEERED METAL BUILDING
PRV	PRESSURE REDUCING VALVE
PSI	POUNDS PER SQUARE INCH
PVC	POLYVINYL CHLORIDE PIPE
RD	ROOF DRAIN
RPBP	REDUCED PRESSURE BACKFLOW PREVENTOR
SAN	SANITARY
SD	STORM DRAIN
SF	SQUARE FEET
SH	SHEET
SS	SERVICE SINK
STO	OVERFLOW STORM DRAIN
V	VENT
VAC	VACUUM
VTR	VENT THRU ROOF
WCO	WALL CLEAN OUT
WM	WASHING MACHINE SUPPLY AND DRAIN BOX
WTR	WATER

NOTE: GENERAL NOTES, ABBREVIATIONS AND SYMBOLS ON THIS PLUMBING SHEET ARE FOR GENERAL REFERENCE PURPOSES ONLY. ALL OF THESE MAY NOT BE USED FOR THIS PROJECT.

PLUMBING SYMBOL LEGEND

- DOMESTIC COLD WATER PIPING
- DOMESTIC HOT WATER PIPING
- DOMESTIC HOT WATER CIRCULATING PIPING
- GAS PIPING
- GREASE WASTE PIPING
- SANITARY PIPING
- SANITARY VENT PIPING
- PRIMARY STORM DRAIN PIPING
- SECONDARY STORM DRAIN PIPING
- CONDENSATE DRAIN PIPING
- COMPRESSED AIR PIPING
- WATER METER
- HOSE BIBB WITH SHUT OFF VALVE IN RISER
- WALL HYDRANT WITH SHUT OFF VALVE
- CLEAN OUT PLUG
- WALL CLEAN OUT
- FLOOR CLEAN OUT
- FLOOR DRAIN
- ROOF DRAIN (ABOVE)
- FLOOR SINK
- SHUT-OFF VALVE IN VALVE BOX
- SHUTOFF VALVE
- BALL VALVE
- CALIBRATED BALANCING VALVE
- CHECK VALVE (SWING)
- PRESSURE REDUCING VALVE
- SOLENOID OPERATED VALVE
- REDUCED PRESSURE BACKFLOW PREVENTER
- RELIEF OR SAFETY VALVE
- GAS COCK
- GAS PRESSURE REGULATOR
- SHUT OFF VALVE IN VERTICAL RISER
- SHUT OFF VALVE
- CONNECTION, TOP
- CONNECTION, BOTTOM
- ELBOW, TURNED DOWN
- ELBOW, TURNED UP
- TEE, TURNED UP
- TEE, TURNED DOWN
- CAP
- DIRECTION OF FLOW
- CODED OR KEY NOTES
- REVISION REFERENCE

CODE COMPLIANCE

1. TO THE BEST OF MY KNOWLEDGE, THESE PLANS AND SPECIFICATIONS ARE COMPLETE AND COMPLY WITH THE 2023 FBC (8TH EDITION), 2023 FPC (8TH EDITION), 2023 FFPC (8TH EDITION).

RENOVATION NOTES

SYMBOL	DESCRIPTION
	CONNECT TO EXISTING
	DEMOLISH TO POINT INDICATED
	NEW PIPING TO BE PROVIDED
	EXISTING PIPING TO REMAIN
	EXISTING PIPING TO BE REMOVED

LAFATE WILSON
architects

1030 arlington ave n, st petersburg fl 33705
(727) 490-9483
studio@lafatewilson.com

THE ARCHITECT'S COMMON LAW COPYRIGHT AND OTHER PROPERTY RIGHTS ARE HEREBY RESERVED IN THE IDEAS, DESIGNS, PLANS, DRAWINGS, AND SPECIFICATIONS SHALL NOT BE REPRODUCED OR CONVEYED IN ANY MANNER NOR ASSIGNED TO ANY THIRD PARTY WITHOUT FIRST OBTAINING THE EXPRESS WRITTEN PERMISSION OF THE ARCHITECT.

OLD MEMORIAL

13600 National Golf Dr
Tampa, FL 33626

no.	description	date
	PERMIT SET	04.24.26

P0.00

PLUMBING
SYMBOLS LEGEND

sheet size 24" x 36"

Reviewed for Code Compliance
With The Florida Building Code
ECS, Florida LLC
41-5640-BLD2 7/20/2026

Electrical Review - Roger Sanders PX651 - Reviewed - 7/14/2026
Mechanical Review - Roger Sanders PX651 - Reviewed - 7/14/2026
Plumbing Review - Roger Sanders PX651 - Reviewed - 7/14/2026
Fire Review - Jay Traina - NA to Private Provider - 7/16/2026
Building Review - Roger Sanders PX651 - Reviewed - 7/14/2026

REFERENCE NOTES:

1. EXISTING SUMP PIT/PUMP TO REMAIN. EXTEND/MODIFY EXISTING SUMP PUMP DRAINAGE PIPING AS NECESSARY TO RECONNECT TO RELOCATED ESD WATER TREATMENT EQUIPMENT.
2. EXISTING RECYCLED WATER STORAGE TANK, EXPANSION TANK, MOTOR CONTROLLER AND PUMP SKID TO BE RELOCATED AS SHOWN.
3. EXISTING ESD WASTE2WATER RECYCLED WATER FILTRATION EQUIPMENT TO BE RELOCATED AS SHOWN. RECONNECT PIPING FROM SUMP DRAINAGE TO ESD AND SUPPLY WATER PIPING TO EXISTING STORAGE TANK. EXTEND HOSES FROM ESD TO CART WASH BAY AREAS. FINAL RECYCLED WATER HOSE LOCATIONS SHALL BE COORDINATED WITH OWNER.
4. EXISTING SANITARY HUB DRAIN ABOVE GRADE TO REMAIN.
5. 3/4" POTABLE CW SUPPLY BELOW GRADE, FOR CONT. SEE CIVIL PLANS.
   SHUT-OFF VALVE IN CAST IRON ACCESS BOX FLUSH WITH GRADE.
6. PROVIDE 3/4" MAKE-UP WATER CONNECTION TO RECYCLED WATER STORAGE TANK. INSTALL RPBP-1 UPSTREAM OF TANK CONNECTION. COORDINATE EXACT LOCATION WITH EXITING EQUIPMENT.
7. EXISTING LINEAR TRENCH DRAIN TO BE REMOVED AND CONCRETE SLAB FILLED IN TO MATCH EXISTING.

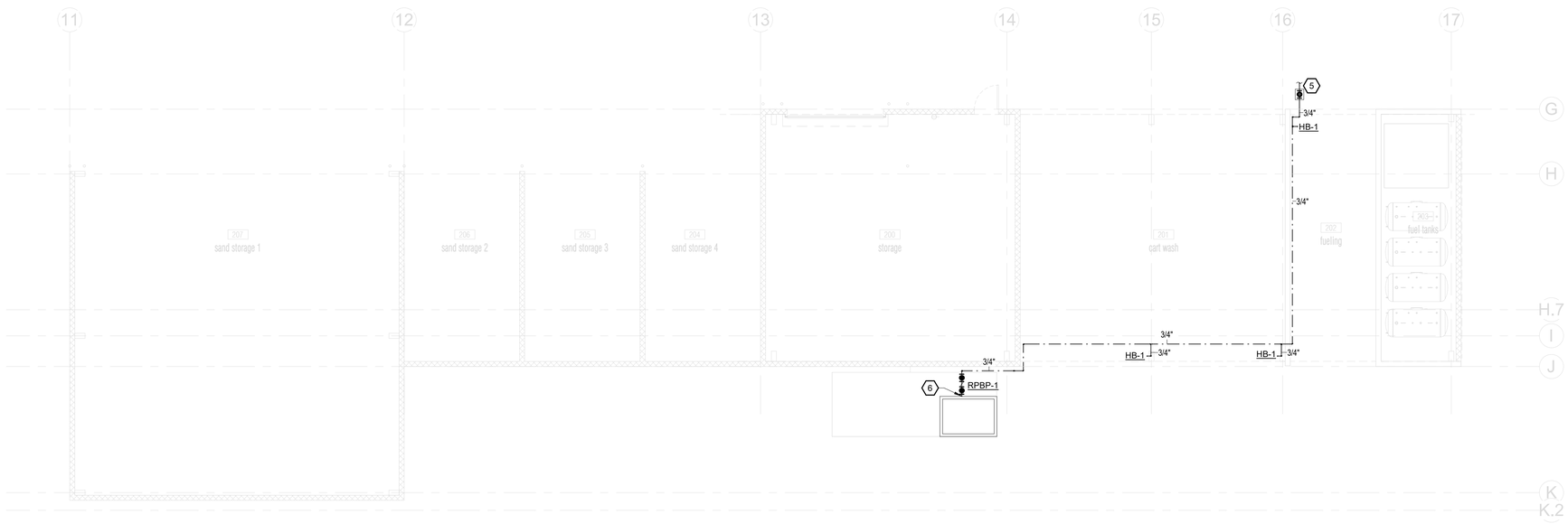

2 SAND AND CHEM STORAGE - DOMESTIC WATER - FLOOR PLAN - PLUMBING
1/8" = 1'-0"

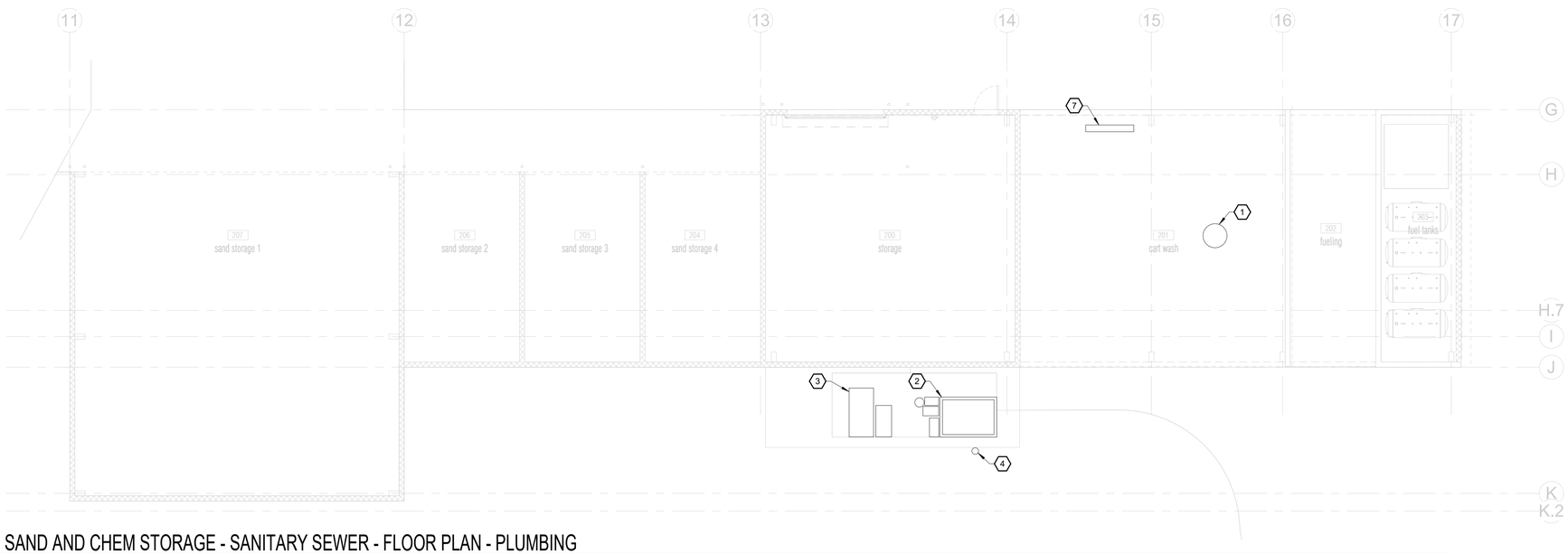

1 SAND AND CHEM STORAGE - SANITARY SEWER - FLOOR PLAN - PLUMBING
1/8" = 1'-0"

LAFATE WILSON
architects

1030 arlington ave n, st petersburg fl 33705
(727) 490-9483
studio@lafatewilson.com

THE ARCHITECT'S COMMON LAW COPYRIGHT AND OTHER PROPERTY RIGHTS ARE HEREBY RESERVED IN THE IDEAS, DESIGNS, PLANS, DRAWINGS, AND SPECIFICATIONS SHALL NOT BE REPRODUCED OR CONVEYED IN ANY MANNER NOR ASSIGNED TO ANY THIRD PARTY WITHOUT FIRST OBTAINING THE EXPRESS WRITTEN PERMISSION OF THE ARCHITECT.

OLD MEMORIAL

13600 National Golf Dr
Tampa, FL 33626

no.	description	date
	PERMIT SET	04.24.26

P1.02.0

BUILDING 2 - FLOOR PLANS - PLUMBING

sheet size 24" x 36"

Reviewed for Code Compliance
With The Florida Building Code
ECS, Florida LLC
41-5640-BLD2 7/20/2026

Electrical Review - Roger Sanders PX651 - Reviewed - 7/14/2026
~~Mechanical Review - Roger Sanders PX651 - Reviewed - 7/14/2026~~
Plumbing Review - Roger Sanders PX651 - Reviewed - 7/14/2026
Fire Review - Jay Traina - NA to Private Provider - 7/16/2026
Building Review - Roger Sanders PX651 - Reviewed - 7/14/2026

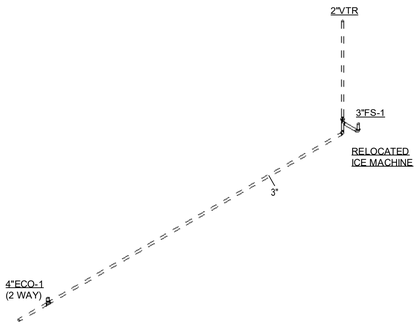

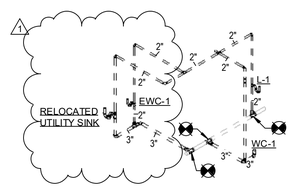

1 SANITARY RISER DIAGRAM - MAINTENANCE BUILDING

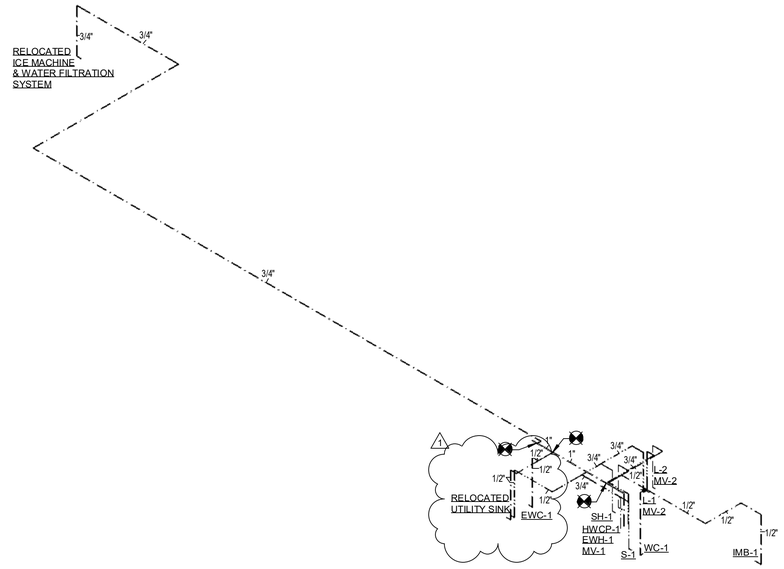

2 DOMESTIC WATER RISER DIAGRAM - MAINTENANCE BUILDING

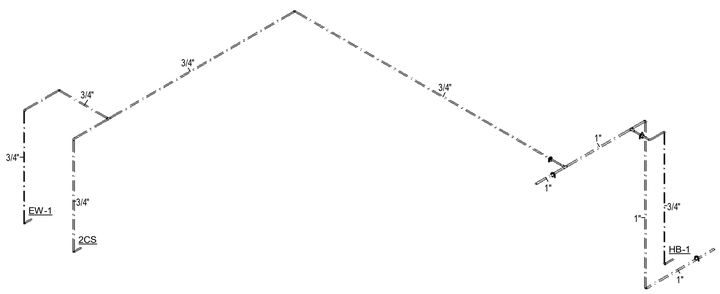

3 DOMESTIC WATER RISER DIAGRAM - CHEM STORAGE

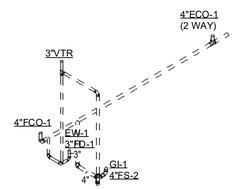

4 SANITARY RISER DIAGRAM - CHEM STORAGE

LAFATE WILSON
a r c h i t e c t s

1030 arlington ave n, st petersburg fl 33705
(727) 490-9483
studio@lafatewilson.com

THE ARCHITECT'S COMMON LAW COPYRIGHT AND OTHER PROPERTY RIGHTS ARE HEREBY RESERVED IN THE IDEAS, DESIGNS, PLANS, DRAWINGS, AND SPECIFICATIONS SHALL NOT BE REPRODUCED OR CONVEYED IN ANY MANNER NOR ASSIGNED TO ANY THIRD PARTY WITHOUT FIRST OBTAINING THE EXPRESS WRITTEN PERMISSION OF THE ARCHITECT.

OLD MEMORIAL

13600 National Golf Dr
Tampa, FL 33626

no.	description	date
	PERMIT SET	04.24.26
1	PERMIT COMMENTS	06.19.26

P4.01

RISERS - PLUMBING

sheet size 24" x 36"

Reviewed for Code Compliance
With The Florida Building Code
ECS, Florida LLC
41-5640-BLD2 7/20/2026

Electrical Review - Roger Sanders PX651 - Reviewed - 7/14/2026
Mechanical Review - Roger Sanders PX651 - Reviewed - 7/14/2026
Plumbing Review - Roger Sanders PX651 - Reviewed - 7/14/2026
Fire Review - Jay Traina - NA to Private Provider - 7/16/2026
Building Review - Roger Sanders PX651 - Reviewed - 7/14/2026

LAFATE WILSON
architects

1030 arlington ave n, st petersburg fl 33705
(727) 490-9483
studio@lafatewilson.com

THE ARCHITECT'S COMMON LAW COPYRIGHT AND OTHER PROPERTY RIGHTS ARE HEREBY RESERVED IN THE IDEAS, DESIGNS, PLANS, DRAWINGS, AND SPECIFICATIONS SHALL NOT BE REPRODUCED OR CONVEYED IN ANY MANNER NOR ASSIGNED TO ANY THIRD PARTY WITHOUT FIRST OBTAINING THE EXPRESS WRITTEN PERMISSION OF THE ARCHITECT.

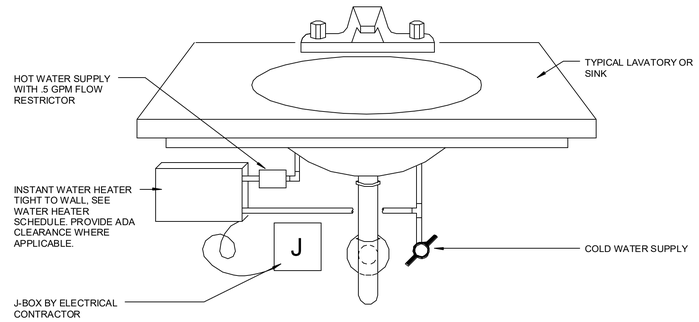

6 INSTANTANEOUS WATER HEATER DETAIL
12" = 1'-0"

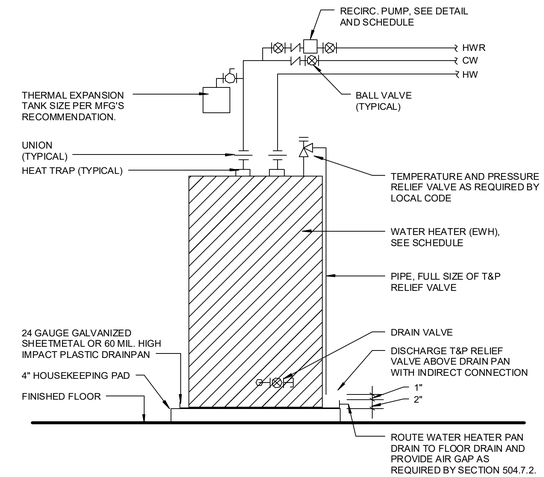

3 ELECTRIC WATER HEATER DETAIL
12" = 1'-0"

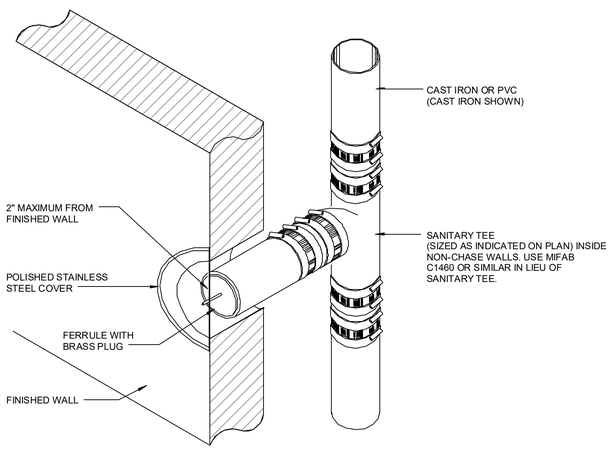

8 WALL CLEANOUT
12" = 1'-0"

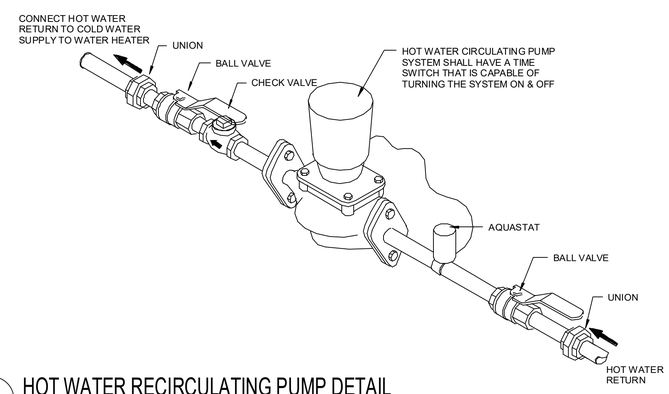

5 HOT WATER RECIRCULATING PUMP DETAIL
12" = 1'-0"

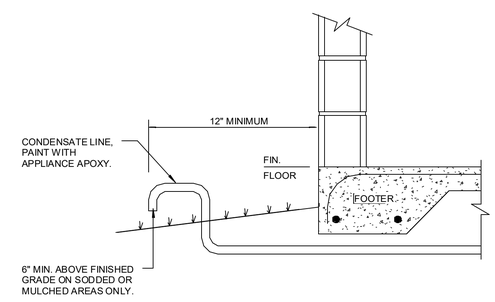

2 CONDENSATE / PAN DRAIN TERMINATION DETAIL
12" = 1'-0"

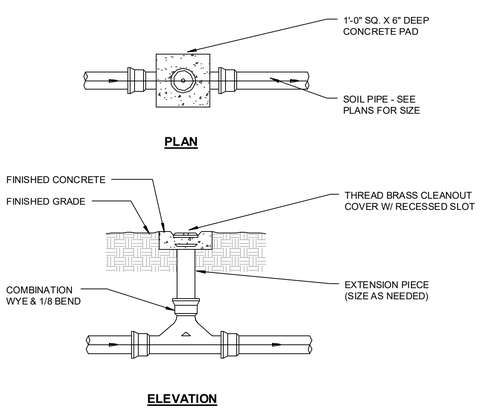

7 TWO WAY CLEANOUT
12" = 1'-0"

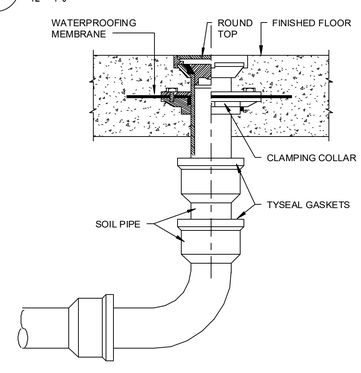

4 FLOOR CLEANOUT
12" = 1'-0"

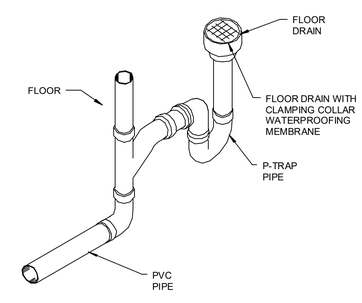

1 AHU CONDENSATE, DRAIN PAN & T&P VALVE HUB DRAIN
12" = 1'-0"

OLD MEMORIAL

13600 National Golf Dr
Tampa, FL 33626

no.	description	date
	PERMIT SET	04.24.26

P5.01

DETAILS - PLUMBING

sheet size 24" x 36"

Reviewed for Code Compliance
With The Florida Building Code
ECS, Florida LLC
41-5640-BLD2 7/20/2026
Electrical Review - Roger Sanders PX651 - Reviewed - 7/14/2026
Mechanical Review - Roger Sanders PX651 - Reviewed - 7/14/2026
Plumbing Review - Roger Sanders PX651 - Reviewed - 7/14/2026
Fire Review - Jay Traina - NA to Private Provider - 7/16/2026
Building Review - Roger Sanders PX651 - Reviewed - 7/14/2026

PLUMBING FIXTURE SCHEDULE

MARK	FIXTURE	WASTE	TRAP	VENT	COLD WATER	HOT WATER	MANUFACTURER /MODEL #	DESCRIPTION
AAV-1	AIR ADMITTANCE VALVE	1-1/2"	-	-	-	-	STUDOR TEC-VENT	MOUNT IN ACCESSIBLE LOCATION FOR MAINTENANCE.
WHA-1	WATER HAMMER ARRESTOR	-	-	-	-	-	SIOUX CHIEF 650 SERIES	SIZE PER MANUFACTURER'S RECOMMENDATIONS. PDI CERTIFIED. WHA-1: SIZE "A" WHA-2: SIZE "B" REFER TO RISER DIAGRAMS FOR ARRESTOR LOCATIONS. REFER TO SPECIFICATION FOR SELECTION METHOD.
ECO-1	EXTERIOR CLEAN-OUT	SIZE/ SEE DWG.	-	-	-	-	ZURN ZS1400-VP	"LEVEL-TROL" ADJUSTABLE FINISHED FLOOR CLEANOUT, DURA-COATED CAST IRON BODY WITH GAS AND WATERTIGHT ABS TAPERED THREADED PLUG, AND HEAVY DUTY CAST IRON TOP, VANDALPROOF SCREWS.
WCO-1	WALL CLEAN-OUT	SIZE/ SEE DWG.	-	-	-	-	ZURN Z1446	CAST IRON CLEAN-OUT TEE, DURA COATED BODY, GAS AND WATERTIGHT ABS TAPERED THREAD PLUG AND ROUND, SMOOTH STAINLESS STEEL WALL ACCESS COVER WITH SECURING SCREW.
FCO-1	FLOOR CLEAN-OUT	SIZE/ SEE DWG.	-	-	-	-	JOSAM 57000-31	PVC CLEAN-OUT WITH 2-WAY CLEAN-OUT TEE, COUNTER SUNK PLUG.
MV-1	MIXING VALVE	SIZE/ SEE DWG.	-	-	3/4"	3/4"	BRADLEY S59-4200T3	ASSE 1017 RATED, MIXING VALVE WITH INTEGRAL CHECKS.
MV-2	MIXING VALVE	SIZE/ SEE DWG.	-	-	3/4"	3/4"	BRADLEY S59-4000-A	ASSE 1070 RATED, MIXING VALVE WITH INTEGRAL CHECKS.
MV-3	MIXING VALVE	SIZE/ SEE DWG.	-	-	3/4"	3/4"	BRADLEY S59-9025	ASSE 1017 RATED, MIXING VALVE WITH INTEGRAL CHECKS.
INT-1	OIL/SAND INTERCEPTOR	3"	-	-	-	-	ZURN 1188-E-HD	100 GPM FLOW RATE, 110 GALLON CAPACITY, FABRICATED STEEL OIL INTERCEPTOR WITH INTEGRAL STORAGE TANK, ACID RESISTANT COATED INTERIOR AND EXTERIOR, FABRICATED STEEL EXTENSION AND HEAVY DUTY TRAFFIC RATED COVER. PROVIDE PLUG WRENCH.
RPBP-1	REDUCED PRESSURE BACKFLOW PREVENTER						WATTS NO. 9D, OR EQUAL	

1. FIXTURES FOR USE BY PEOPLE WITH DISABILITIES:
   A. INSTALL IN ACCORDANCE WITH A.D.A., STATE AND LOCAL REQUIREMENTS.
   B. THE FORCE REQUIRED TO ACTIVATE FLUSH VALVES SHALL BE 5 LBS MAXIUM.
   C. FLUSH ACTIVATOR SHALL BE LOCATED ON WIDE SIDE OF THE STALL.
   D. THE FAUCET CONTROLS AND THE OPERATING MECHANISM (OPERABLE WITH ONE HAND) SHALL BE OF THE TYPE NOT REQUIRING AN OPERATING FORCE EXCEEDING 5 LBS, OR TIGHT GRASPING, PINCHING OR TWISTING OF THE WRIST.

ELECTRIC WATER HEATER SCHEDULE

UNIT #	TYPE	GALLONS	INPUT KW	EFF.	GPH REC. @ 70°F RISE	VOLT/PHASE CURRENT DRAW (PER PHASE)	WEIGHT (LBS.)	DIMENSIONS	MANUFACTURER	
									MANUFACTURER	MODEL #
EWH-1	ELECTRIC	40	4.5	95%	53	208V - 1Ø	473	48" H x 20"Ø	RHEEM	ELDS40-TB
EWH-2	ELECTRIC	40	4.5	95%	53	208V - 1Ø	473	48" H x 20"Ø	RHEEM	ELDS40-TB
EWH-3	ELECTRIC	40	4.5	95%	53	208V - 1Ø	473	48" H x 20"Ø	RHEEM	ELDS40-TB

NOTES:
1. PROVIDE WITH EXPANSION VALVE, T & P VALVE AND WATER HEATER DRAIN PAN.
2. COORDINATE WATER HEATER LOCATION AND PIPING WITH MECHANICAL AND ELECTRICAL PLANS.

PUMP SCHEDULE

UNIT #	DESCRIPTION	TYPE	GPM	FT HEAT	PUMP EFF.: %	CONN. SIZE		MOTOR DATA				SELECTION BASED ON:		NOTES
						INLET	OUTLET	HP	RPM	VOLT	PH.	MANUFACTURER	MODEL	
HWCP-1	HOT WATER CIRCULATION PUMP	IN LINE PUMP	3	12	70	3/4"	3/4"	1/6	1750	120	1 PH	BELL & GOSSETT	SERIES 60	PROVIDE AQUASTAT AND TIME CLOCK.

ELECTRIC INSTANTANEOUS WATER HEATER SCHEDULE

UNIT #	SERVING	TYPE	GALLONS	INPUT KW	RECOVERY (GPM)	VOLT/PHASE CURRENT DRAW (PER PHASE)	WEIGHT (LBS.)	DIMENSIONS	MANUFACTURER	
									MANUFACTURER	MODEL #
IWH-1	SINKS	ELECTRIC	INSTANTANEOUS	8.3	57 DEG RISE @ 1 GPM	208V - 1Ø	4.5	10"H x 5.5"W x 4"D	EEMAX	PA008208T

NOTES:
1. COORDINATE WATER HEATER SERVICES, PIPING AND LOCATION WITH MECHANICAL AND ELECTRICAL PLANS.

PDI SIZING METHOD FOR GREASE TRAP

EFFECTIVE CAPACITY OF GREASE INTERCEPTOR (GALLONS) 3 COMPARTMENT SINK @ 16"x20x"10" EA. x 2 = 6400
CONTENTS IN GALLONS: CUBIC INCHES DIVIDED BY 231 = 27.7 GALLONS ACTUAL DRAINAGE LOAD 0.75 x 27.7 = 20.8 GALLONS
CALCULATION FOR FLOW RATE FOR ONE MINUTE PERIOD: 14/1 = 14 GPM FLOW RATE
FOR ONE MINUTE PERIOD 20 GPM REQUIRES ONE SCHIER GB-1 (20GPM/70LBS) GREASE TRAP (GI-1)

PLUMBING FIXTURE SCHEDULE

MARK	FIXTURE	WASTE	TRAP	VENT	COLD WATER	HOT WATER	MANUFACTURER /MODEL #	DESCRIPTION
WC-1	WATER CLOSET	3"	INTEG	2"	1/2"	-	KOHLER K-3998-0	TANK TYPE - RIM 14-1/4" AFF, VITREOUS CHINA, 1.0 GPF, SIPHON JET, ELONGATED BOWL, FLOOR MOUNTED, CLOSED COUPLED COMBINATION; BOLT CAPS. ANGLE STOP SUPPLIES & ESCUTCHEONS. COORDINATE FINISH WITH ARCHITECT. SOLID PLASTIC, ELONGATED WHITE SEAT, KOHLER K-4636. FLUSH CONTROLS TO BE LOCATED ON THE OPEN SIDE OF THE WATER CLOSET.
WC-2	WATER CLOSET - ADA	3"	INTEG	2"	1/2"	-	KOHLER K-3493-0	TANK TYPE - RIM 17-1/8" AFF, VITREOUS CHINA, 1.0 GPF, SIPHON JET, ELONGATED BOWL, FLOOR MOUNTED, CLOSED COUPLED COMBINATION; BOLT CAPS. ANGLE STOP SUPPLIES & ESCUTCHEONS. COORDINATE FINISH WITH ARCHITECT. SOLID PLASTIC, ELONGATED WHITE SEAT, KOHLER K-4636. FLUSH CONTROLS TO BE LOCATED ON THE OPEN SIDE OF THE WATER CLOSET.
WC-3	WATER CLOSET BREAKROOM	3"	INTEG	2"	1"	-	KOHLER K-96053-0 KOHLER K-76321	VITREOUS CHINA, 15-1/4" MOUNTING HEIGHT INCLUDING SEAT, 1.28 GALLON, FLOOR MOUNTED, SIPHON JET, ELONGATED CLOSET BOWL WITH 1-1/2" TOP SPUD. 1.28 GALLON CHROME PLATED FLUSH VALVE(EXPOSED), 1-INCH I.P.S. SCREW DRIVER ANGLE STOP WITH PROTECTIVE CAP, ADJUSTABLE TAILPIECE, VACUUM BREAKER
WC-4	WATER CLOSET - ADA BREAKROOM	3"	INTEG	2"	1"	-	KOHLER K-96057-0 KOHLER K-76321	VITREOUS CHINA, 16-3/4" MOUNTING HEIGHT INCLUDING SEAT, 1.28 GALLON, FLOOR MOUNTED, SIPHON JET, ELONGATED CLOSET BOWL WITH 1-1/2" TOP SPUD. 1.28 GALLON CHROME PLATED FLUSH VALVE(EXPOSED), 1-INCH I.P.S. SCREW DRIVER ANGLE STOP WITH PROTECTIVE CAP, ADJUSTABLE TAILPIECE, VACUUM BREAKER
L-1	LAVATORY	1-1/2"	1-1/4"	1-1/2"	1/2"	1/2"	KOHLER K-2882-0 BRADLEY S53-3700	19-3/4" RECTANGULAR UNDERMOUNT BATHROOM SINK, VITREOUS CHINA, SINGLE HOLE PUNCH, WHITE, OVERFLOW DRAIN. COMPLETE WITH RAP AND TRIM RINGS.
L-2	LAVATORY - ADA	1-1/2"	1-1/4"	1-1/2"	1/2"	1/2"	DURAVIT 07054500002 BRADLEY S53-3700	BARRIER FREE - 17-1/2" x 13-3/4", WALL MOUNTED, VITREOUS CHINA SINK. BRASSCRAFT 1/4 TURN ANGLE STOP SUPPLIES W/SUPPLY TUBES AND ESCUTCHEONS. PROVIDE CHAIR CARRIER AND FLOOR DRAIN TRAP GUARDS.
L-3	LAVATORY DORMS	1-1/2"	1-1/4"	1-1/2"	1/2"	1/2"	KOHLER K-2983-0 BRADLEY S53-3700	15-3/4" ROUND UNDERMOUNT BATHROOM SINK, VITREOUS CHINA, SINGLE HOLE PUNCH, WHITE, OVERFLOW DRAIN. COMPLETE WITH RAP AND TRIM RINGS.
S-1	SINGLE COMPARTMENT SINK	2"	2"	1-1/2"	1/2"	1/2"	AMERICAN STANDARD 18SB625221'.075 7074100.002	25"x22" 18-GAUGE STAINLESS STEEL, TOP MOUNT SINK. SINGLE HOLE, SINGLE BOWL. SUPPLY WITH MOUNTING CLIPS AND COLONY PRO SINGLE-HANDLE PULL-OUT SPRAY KITCHEN FAUCET.
SH-1	SHOWER	2"	2"	1-1/2"	1/2"	1/2"	STERLING OC-SS-39 CLEVELAND FAUCET 46302CGR	39-3/8" x 39-3/8" VIKRELL SHOWER BASE, TEXTURED FLOOR, INTEGRATED TILING FLANGE, CENTER DRAIN. PRESSURE BALANCE SHOWER, METAL LEVER HANDLE, 1.75 GPM SINGLE FUNCTION SHOWER HEAD. PROVIDE WITH KOHLER RITE-TEMP/KP8304-KS.
SH-2	SHOWER	2"	2"	1-1/2"	1/2"	1/2"	- CLEVELAND FAUCET 46302CGR	60" x 36" VIKRELL SHOWER BASE, TEXTURED FLOOR, INTEGRATED TILING FLANGE, CENTER DRAIN. PRESSURE BALANCE SHOWER, METAL LEVER HANDLE, 1.75 GPM SINGLE FUNCTION SHOWER HEAD. PROVIDE WITH KOHLER RITE-TEMP/KP8304-KS.
SH-3	SHOWER	2"	2"	1-1/2"	1/2"	1/2"	- CLEVELAND FAUCET 46302CGR	60" x 60" VIKRELL SHOWER BASE, TEXTURED FLOOR, INTEGRATED TILING FLANGE, CENTER DRAIN. PRESSURE BALANCE SHOWER, METAL LEVER HANDLE, 1.75 GPM SINGLE FUNCTION SHOWER HEAD. PROVIDE WITH KOHLER RITE-TEMP/KP8304-KS.
SH-4	SHOWER DORMS	2"	2"	1-1/2"	1/2"	1/2"	- CLEVELAND FAUCET 46302CGR	62" x 36" VIKRELL SHOWER BASE, TEXTURED FLOOR, INTEGRATED TILING FLANGE, CENTER DRAIN. PRESSURE BALANCE SHOWER, METAL LEVER HANDLE, 1.75 GPM SINGLE FUNCTION SHOWER HEAD. PROVIDE WITH KOHLER RITE-TEMP/KP8304-KS.
UR-1	URINAL	2"	INTEG	2"	3/4"	-	AMERICAN STANDARD 6561017.020 6063101.002	LIP +17" VITREOUS CHINA, WHITE, WALL HUNG SIPHON JET FLUSH URINAL COMPLETE WITH 3/4" TOP SPUD AND WALL HANGERS. PROVIDE AMERICAN STANDARD SELECTRONIC TOUCHLESS FLUSH VALVE, DC POWER FOR ALL URINALS.
UR-2	URINAL - ADA	2"	INTEG	2"	3/4"	-	AMERICAN STANDARD 6561017.020 6063101.002	LIP +17" VITREOUS CHINA, WHITE, WALL HUNG SIPHON JET FLUSH URINAL COMPLETE WITH 3/4" TOP SPUD AND WALL HANGERS. PROVIDE AMERICAN STANDARD SELECTRONIC TOUCHLESS FLUSH VALVE, DC POWER FOR ALL URINALS.
2CS	2 COMPARTMENT SINK	SIZE/ SEE DWG.	1-1/2"	1-1/2"	3/4"	3/4"	BK RESOURCES BKS-2-1620-10-18TS KROWNE 14-810L	TWO 16"X20"X10" COMPARTMENT SINK STAINLESS STEEL LEG 18" DRAINBOARD L&R. 10" SWING SPOUT FAUCET SPLASH MOUNT 8" CENTER LOW LEAD
IMB-1	ICE MAKER BOX	-	-	-	1/2"	-	OATEY 38491	BULK MOLDED COMPOUND, FIRE-RATED BOX W/ DIMENSION OF 8.63" HIGH x 8.13" WIDE. 1/4 TURN BRASS BALL VALVE WITH WATER HAMMER ARRESTOR.
WB-1	WASHER BOX	3"	2"	1-1/2"	3/4"	3/4"	OATEY 38247 PLUMBCRAFT 7639500T	VALVE 36"AFF. HIGH IMPACT PLASTIC BOX W/ DIMENSION OF 7" HIGH x 9.89" WIDE. TWO 1/4 TURN ANGLE VALVES WITH WATER HAMMER ARRESTORS, 3/8" DIA. SUPPLY CONNECTION. NYLON LINT TRAP FOR WASHING MACHINE DRAIN SYSTEM.
HB-1	HOSE BIBB	-	-	-	3/4"	-	WOODFORD B24	SANITARY, AUTO DRAINING, WITH VACUUM BREAKER, BACKFLOW PROTECTED. SEE PLANS FOR WALL THICKNESS AND MOUNTING HEIGHT.
FD-1	FLOOR DRAIN	SIZE/ SEE DWG.	-	-	-	-	ZURN ZN415S	DURA-COATED CAST IRON BODY WITH BOTTOM OUTLET, COMBINATION INVERTIBLE MEMBRANE CLAMP AND ADJUSTABLE COLLAR WITH SEEPAGE SLOTS AND SQUARE TYPE 'B' POLISHED NICKEL BRONZE STRAINER.
FD-2	FLOOR DRAIN	SIZE/ SEE DWG.	-	-	-	-	ZURN ZN415SH	DURA-COATED CAST IRON BODY WITH BOTTOM OUTLET, COMBINATION INVERTIBLE MEMBRANE CLAMP AND ADJUSTABLE COLLAR WITH SEEPAGE SLOTS AND TYPE 'SH' POLISHED NICKEL BRONZE, SQUARE HINGED, LIGHT DUTY STRAINER.
FS-1	FLOOR SINK	SIZE/ SEE DWG.	-	-	-	-	ZURN Z1900	DURA-COATED CAST IRON 12"x12"x6" BODY WITH BOTTOM OUTLET, COMBINATION INVERTIBLE MEMBRANE CLAMP AND ADJUSTABLE COLLAR WITH SEEPAGE SLOTS AND SQUARE TYPE 'B' POLISHED NICKEL BRONZE HALF GRATE. PROVIDE 1/2" COLD WATER TRAP PRIMER CONNECTION.
FS-2	FLOOR SINK	SIZE/ SEE DWG.	-	-	-	-	ZURN Z1901	DURA-COATED CAST IRON 12"x12"x8" BODY WITH BOTTOM OUTLET, COMBINATION INVERTIBLE MEMBRANE CLAMP AND ADJUSTABLE COLLAR WITH SEEPAGE SLOTS AND SQUARE TYPE 'E' POLISHED NICKEL BRONZE HALF GRATE. PROVIDE 1/2" COLD WATER TRAP PRIMER CONNECTION.
EW-1	EYE WASH STATION	SIZE/ SEE DWG.	-	-	3/4"	-	BRADLEY S19-212	PEDESTAL MOUNT EYE/FACE WASH UNIT WITH PLASTIC BOWL.
EWC-1	ELECTRIC WATER COOLER HI/LOW W/ BOTTLE FILLER	2"	1-1/2"	1-1/2"	1/2"	-	ELKAY LZSTL8WSLK	LOWER BUBBLER 32-1/2"AFF, UPPER 38-1/2"AFF. BOTTLE FILLING STATION WITH ELECTRONIC BOTTLE FILLER SENSOR WITH ELECTRONIC FRONT AND SIDE BUBBLER PUSHBAR ACTIVATION. WALL MOUNTED CAPACITY TO DELIVER 8 GPH OF 50°F WATER WITH INLET TEMP. OF 80°F AND ROOM TEMP. OF 90°F, STAINLESS STEEL BASIN & PEWTER VINYL W/ 1/5 HP., 120V/1Ø.

1. FIXTURES FOR USE BY PEOPLE WITH DISABILITIES:
   A. INSTALL IN ACCORDANCE WITH A.D.A., STATE AND LOCAL REQUIREMENTS.
   B. THE FORCE REQUIRED TO ACTIVATE FLUSH VALVES SHALL BE 5 LBS MAXIUM.
   C. FLUSH ACTIVATOR SHALL BE LOCATED ON WIDE SIDE OF THE STALL.
   D. THE FAUCET CONTROLS AND THE OPERATING MECHANISM (OPERABLE WITH ONE HAND) SHALL BE OF THE TYPE NOT REQUIRING AN OPERATING FORCE EXCEEDING 5 LBS, OR TIGHT GRASPING, PINCHING OR TWISTING OF THE WRIST.

LAFATE WILSON
architects

1030 arlington ave n, st petersburg fl 33705
(727) 490-9483
studio@lafatewilson.com

THE ARCHITECT'S COMMON LAW COPYRIGHT AND OTHER PROPERTY RIGHTS ARE HEREBY RESERVED IN THE IDEAS, DESIGNS, PLANS, DRAWINGS, AND SPECIFICATIONS SHALL NOT BE REPRODUCED OR CONVEYED IN ANY MANNER NOR ASSIGNED TO ANY THIRD PARTY WITHOUT FIRST OBTAINING THE EXPRESS WRITTEN PERMISSION OF THE ARCHITECT.

OLD MEMORIAL

13600 National Golf Dr
Tampa, FL 33626

no.	description	date
	PERMIT SET	04.24.26
1	PERMIT COMMENTS	06.19.26

P6.01

SCHEDULES - PLUMBING

sheet size 24" x 36"